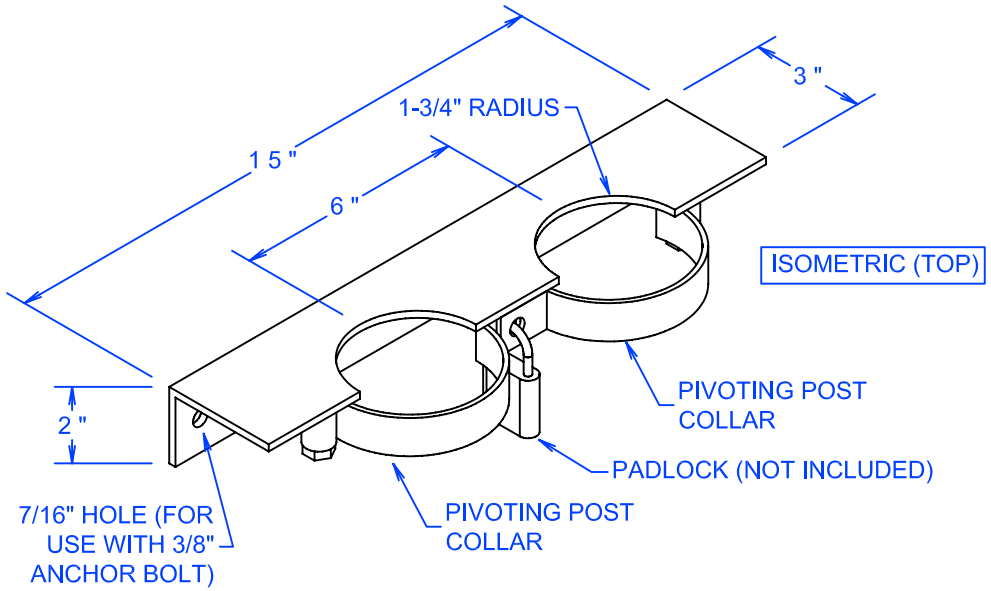

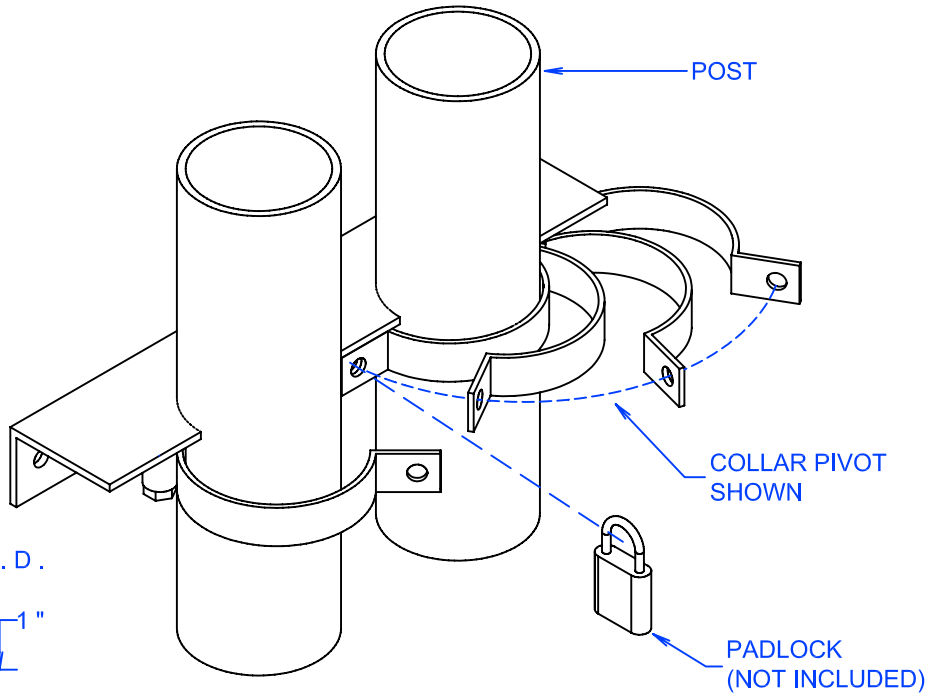

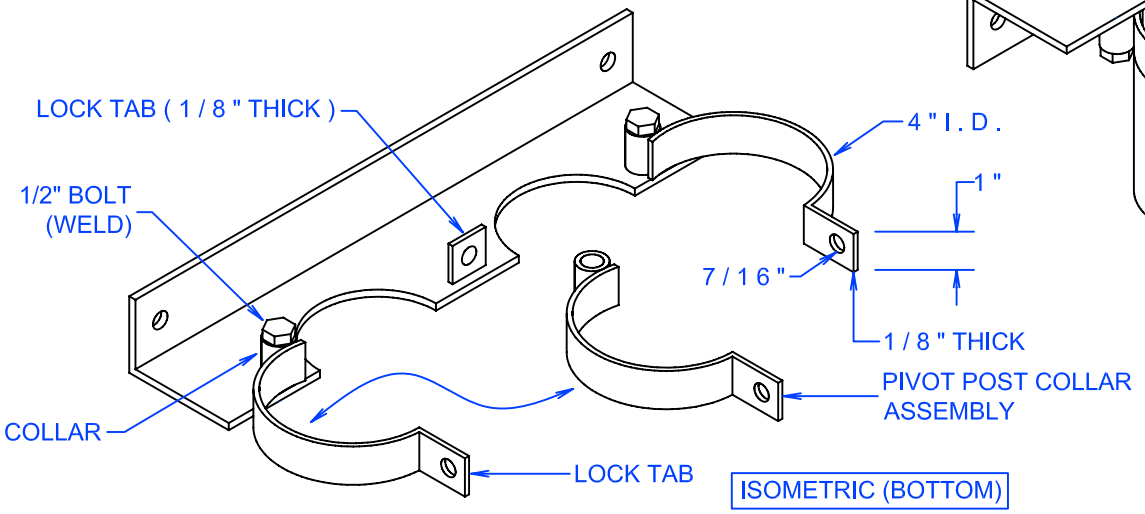

REVISION / STAGE:	MONTH / DAY / YEAR	RELATED DRAWINGS / INFORMATION:		ARIZONA COURTLINES, INC.	DRAWN BY:
			P S R L - 3 1 2 - 2		EDDIE CAFFERATA
					CHECKED BY:
			POST STORAGE RACK FOR USE WITH 3-1/2" DIAMETER POSTS (DOUBLE)	8742 NORTH 78 TH AVENUE PEORIA, ARIZONA 85345 PHONE (623) 939 - 8126 FAX (623) 939 - 2526 WWW.ARIZONACOURTLINES.COM	QUANTITY:
P S R L - 3 1 2 - 2		THIS DRAWING IS PROPERTY OF ARIZONA COURTLINES, INC. AND MAY NOT BE REPRODUCED WITHOUT WRITTEN PERMISSION			