POST STORAGE RACKS				
X	MODEL	A	B	C
	PSR-238-2	7-3/4"	2-3/8"	3-7/8"
	PSR-238-3	11-5/8"	2-3/8"	3-7/8"
	PSR-300-2	9"	3"	4-1/2"
	PSR-300-3	13-1/2"	3"	4-1/2"
	PSR-312-2	10"	3-1/2"	5"
	PSR-312-3	15"	3-1/2"	5"
	PSR-400-2	11"	4"	5-1/2"
	PSR-400-3	16-1/2"	4"	5-1/2"

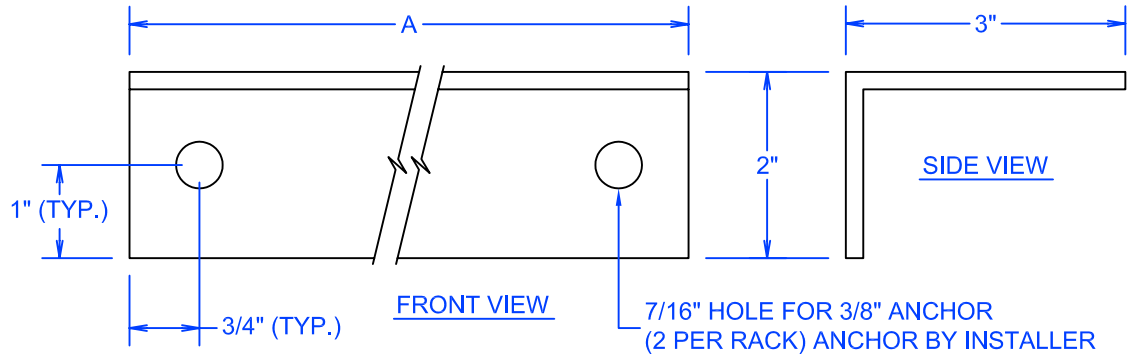

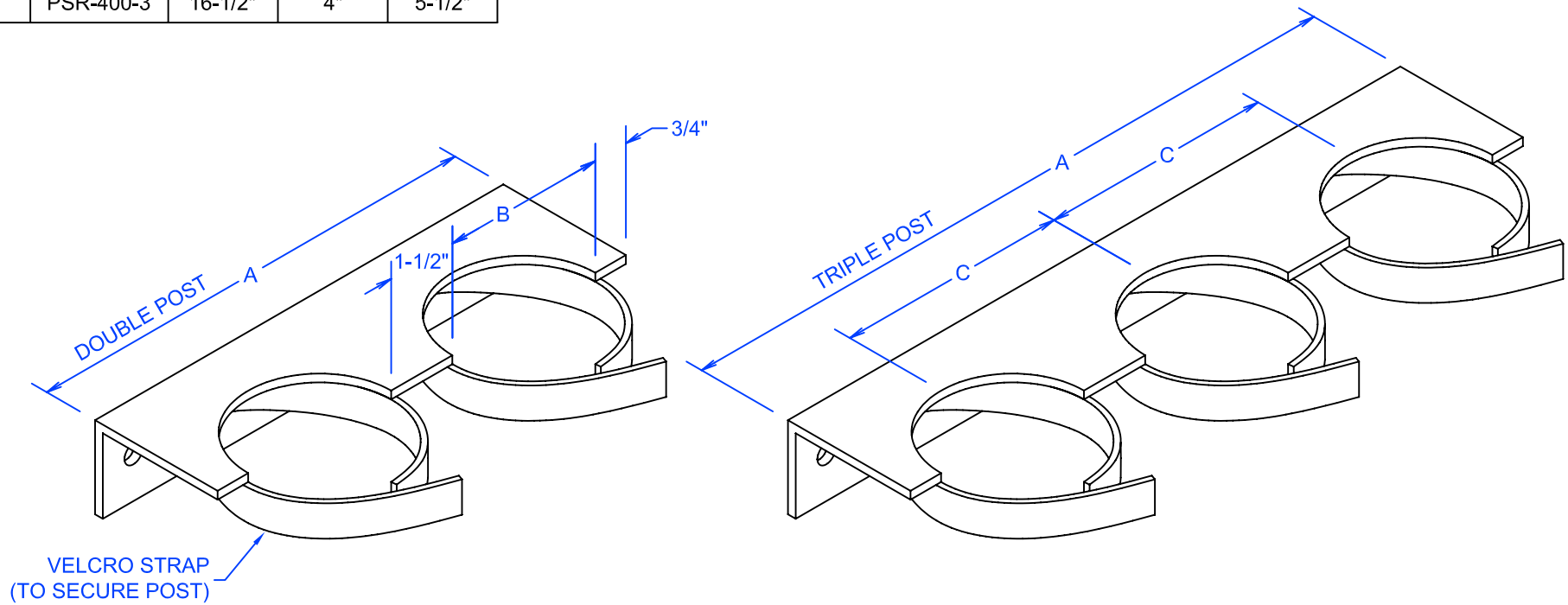

REVISION / STAGE:	MONTH / DAY / YEAR	RELATED DRAWINGS / INFORMATION:	POST STORAGE RACK	ARIZONA COURTLINES, INC.	DRAWN BY: EDDIE CAFFERATA
					CHECKED BY:
			DOUBLE POSTS RACK TRIPLE POSTS RACK	8742 NORTH 78TH AVENUE PEORIA, ARIZONA 85345 TEL. 623.939.8126 FAX. 623.939.2526 www.ARIZONACOURTLINES.com	QUANTITY:
PSR-DETAILS		THIS DRAWING IS PROPERTY OF ARIZONA COURTLINES, INC. AND MAY NOT BE REPRODUCED WITHOUT WRITTEN PERMISSION			