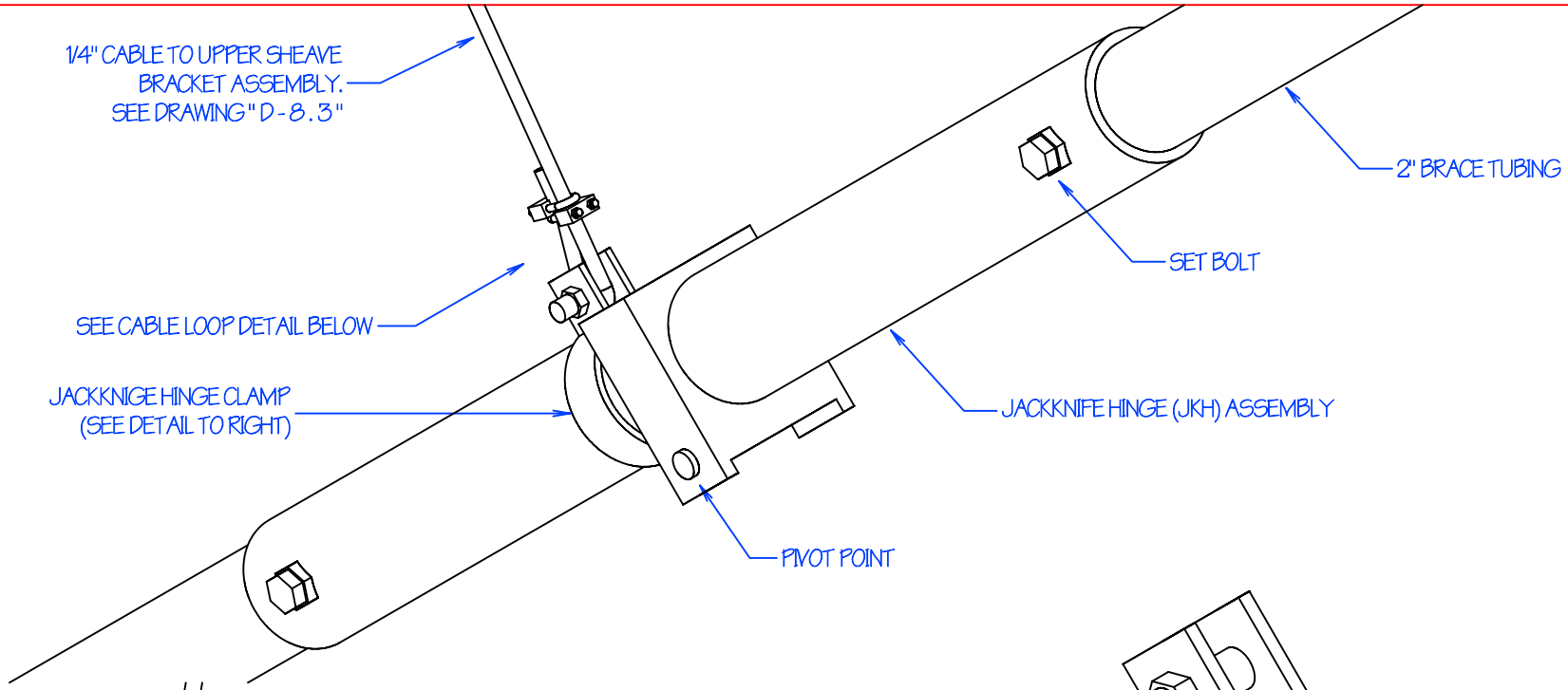

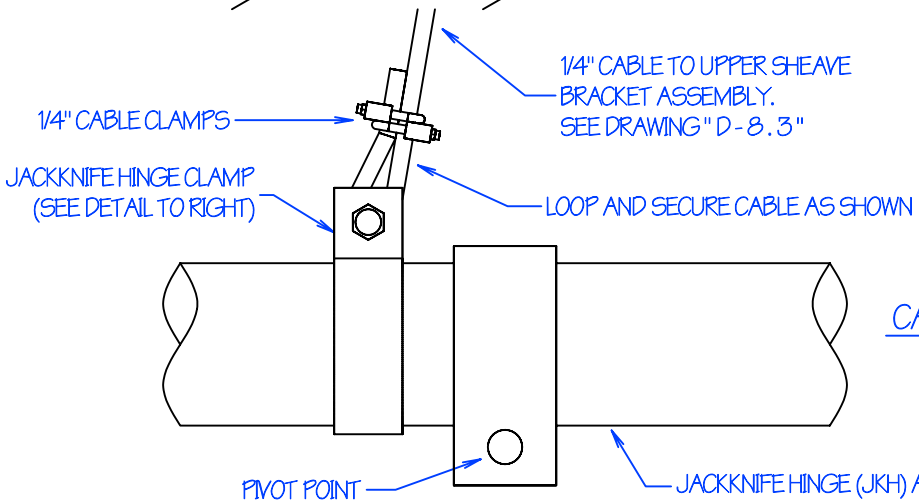

CABLE LOOP DETAIL
(SIDE VIEW)

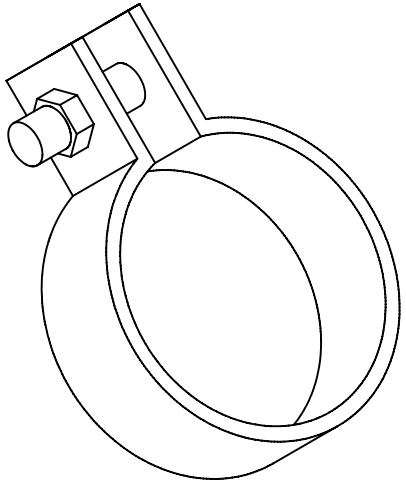

JACKKNIFE HINGE CLAMP ASSEMBLY

REVISION / STAGE:	MONTH / DAY / YEAR	RELATED DRAWINGS / INFORMATION:
D-8.4		THIS DRAWING IS PROPERTY OF ARIZONA COURTLINES, INC. AND MAY NOT BE REPRODUCED WITHOUT WRITTEN PERMISSION

D-8.4

JACKKNIFE HINGE CLAMP
PART OF "D-8.3" ASSEMBLY

ARIZONA COURTLINES, INC.
8742 NORTH 78 TH AVENUE
PEORIA, ARIZONA 85345
PHONE (623) 939 - 8126
FAX (623) 939 - 2526
WWW.ARIZONACOURTLINES.COM

DRAWN BY:
EDDIE CAFFERATA

CHECKED BY:

QUANTITY: