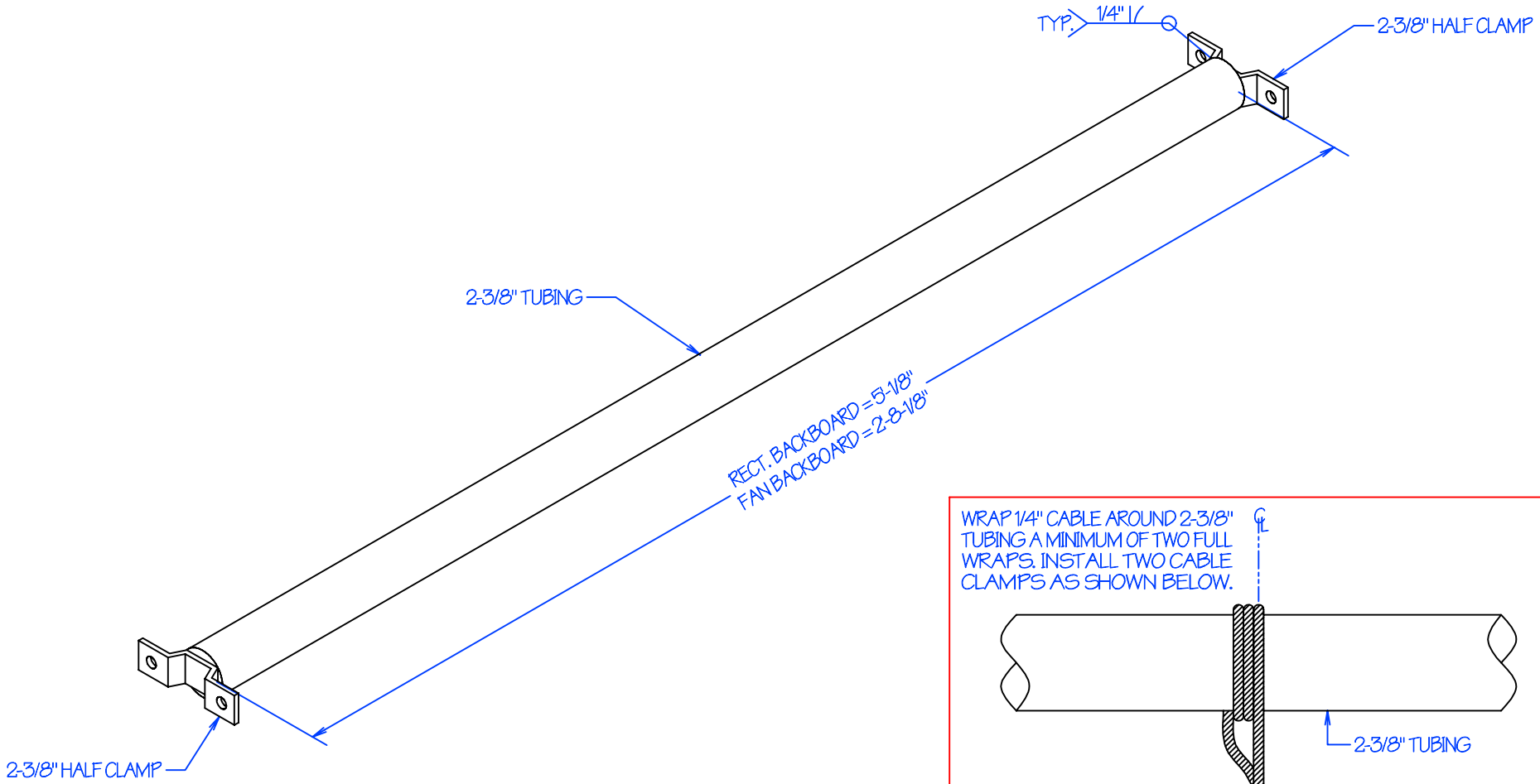

WRAP 1/4" CABLE AROUND 2-3/8" TUBING A MINIMUM OF TWO FULL WRAPS. INSTALL TWO CABLE CLAMPS AS SHOWN BELOW.

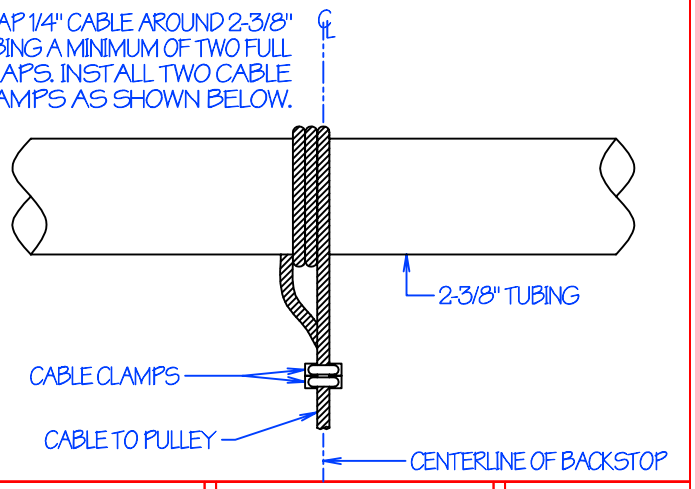

REVISION / STAGE:	MONTH / DAY / YEAR	RELATED DRAWINGS / INFORMATION:
D-7.1		THIS DRAWING IS PROPERTY OF ARIZONA COURTLINES, INC. AND MAY NOT BE REPRODUCED WITHOUT WRITTEN PERMISSION

DOUBLE DROP FOLDING BACKSTOPS

BOLT-ON CROSSBAR (CABLE ATTACHMENT)

ARIZONA COURTLINES, INC.
8742 NORTH 78 TH AVENUE
PEORIA, ARIZONA 85345
PHONE (623) 939 - 8126
FAX (623) 939 - 2526
WWW.ARIZONACOURTLINES.COM

DRAWN BY: EDDIE CAFFERATA

CHECKED BY:

QUANTITY: