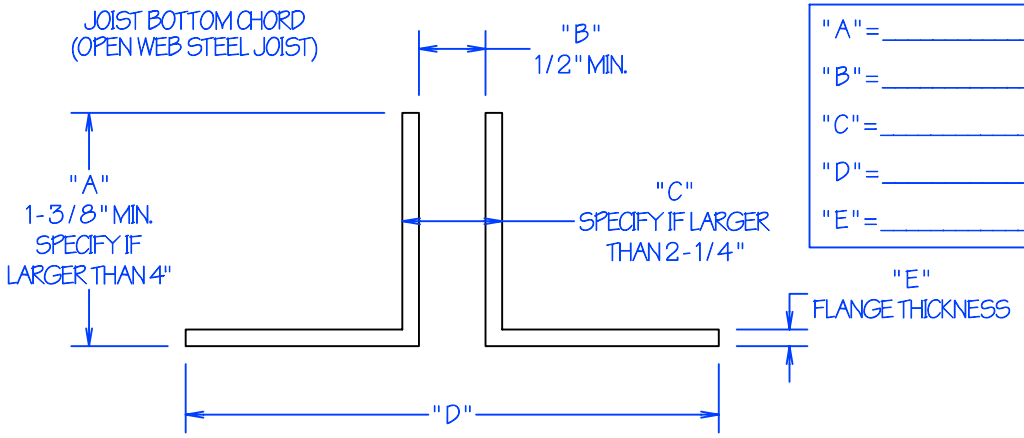

"A" = _____

"B" = _____

"C" = _____

"D" = _____

"E" = _____

ALL THREAD LENGTHS:

6" + "A" = ALL THREAD "X"

5" + "D" = ALL THREAD "Y"

6-1/2" + "E" = ALL THREAD "Z"

STANDARD ALL THREAD LENGTHS:

ALL THREAD "X" = 10"

ALL THREAD "Y" = 14"

ALL THREAD "Z" = 7"

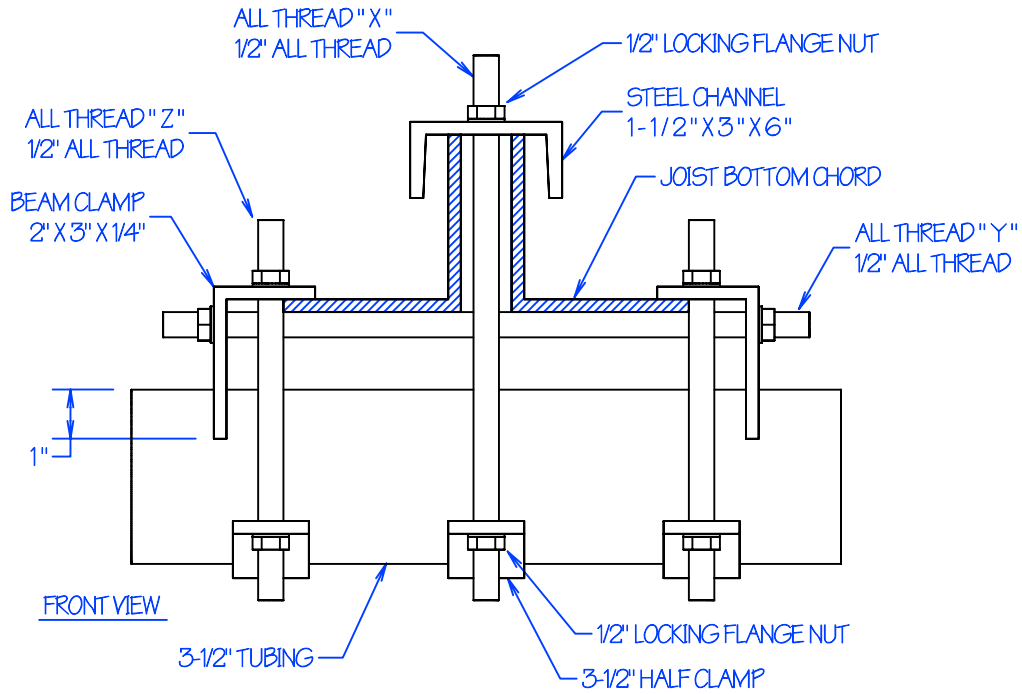

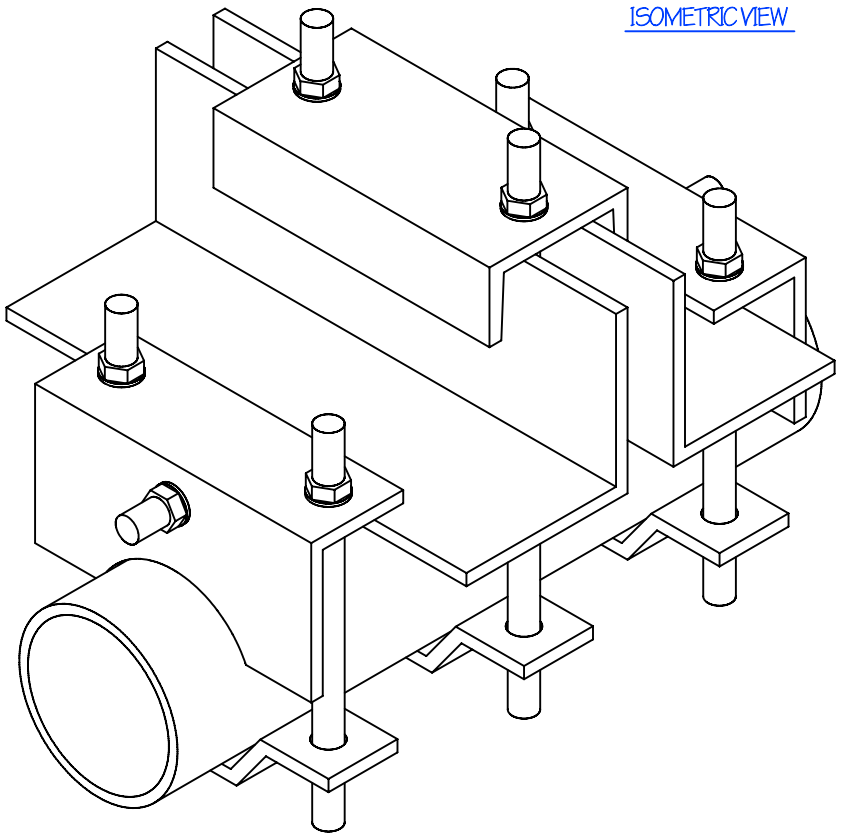

* PATENTED

REVISION / STAGE:	MONTH / DAY / YEAR	RELATED DRAWINGS / INFORMATION:
D - 2		THIS DRAWING IS PROPERTY OF ARIZONA COURTLINES, INC. AND MAY NOT BE REPRODUCED WITHOUT WRITTEN PERMISSION

D - 2

TRIPLE CLAMP - JOIST / TRUSS CLAMP
(3-1/2" TUBING TO OPEN WEB STEEL JOIST)

ARIZONA COURTLINES, INC.
8742 NORTH 78 TH AVENUE
PEORIA, ARIZONA 85345
PHONE (623) 939 - 8126
FAX (623) 939 - 2526
WWW.ARIZONACOURTLINES.COM

DRAWN BY: EDDIE CAFFERATA

CHECKED BY:

QUANTITY: _____