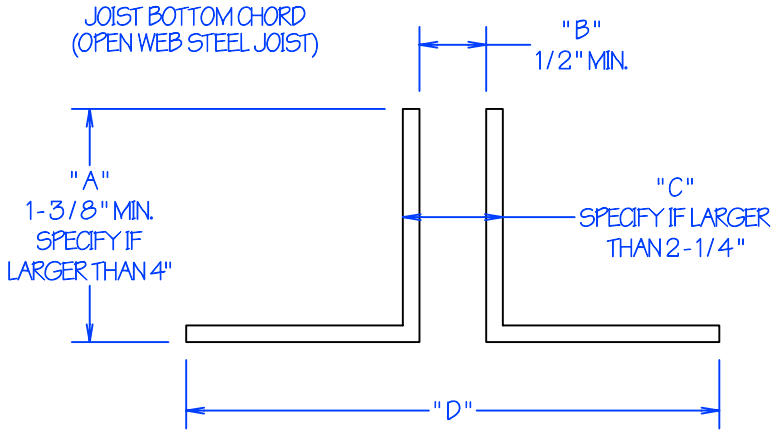


"A" = _____

"B" = _____

"C" = _____

"D" = _____

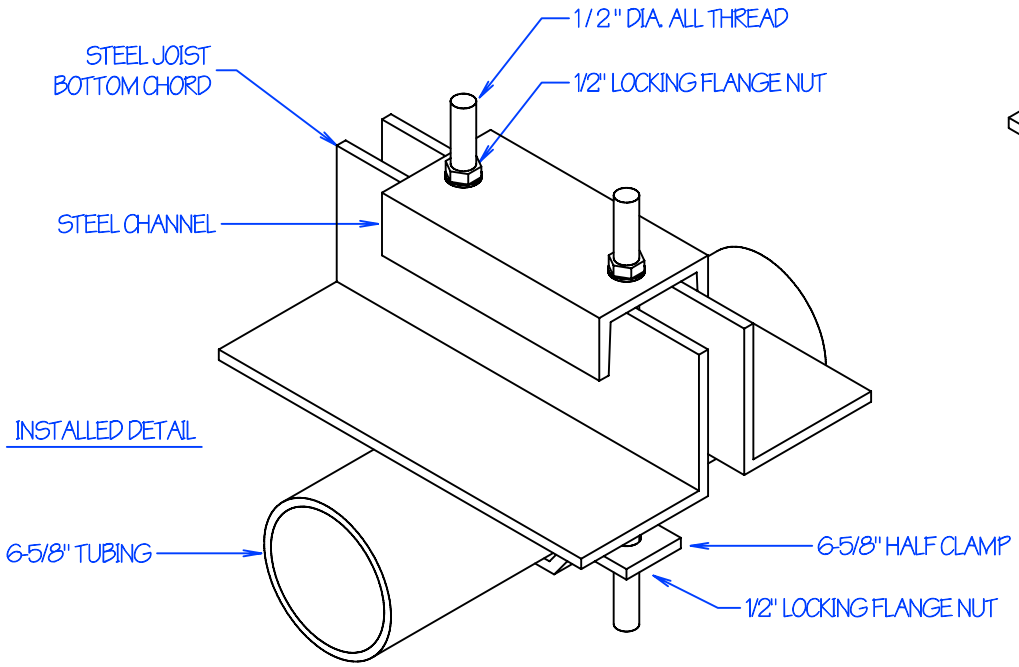


INSTALLED DETAIL

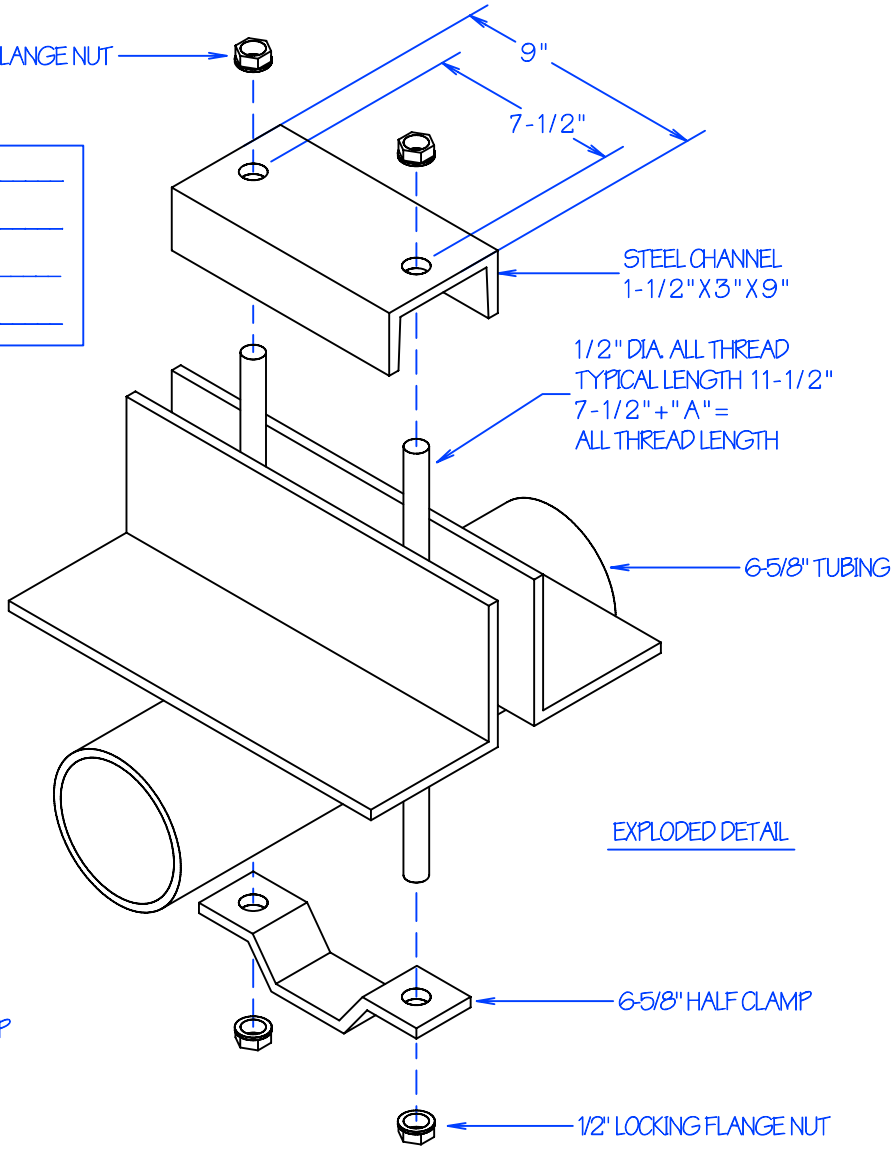


EXPLODED DETAIL

* PATENTED

| REVISION / STAGE: | MONTH / DAY / YEAR | RELATED DRAWINGS / INFORMATION: |
|---|---|---|
| | | |
| | | |
| | | |
| | | |
| D-1.6 | | THIS DRAWING IS PROPERTY OF ARIZONA COURTLINES, INC. AND MAY NOT BE REPRODUCED WITHOUT WRITTEN PERMISSION |

D-1.6

JOIST / TRUSS CLAMP
(6-5/8" TUBING TO OPEN WEB STEEL JOIST)

ARIZONA COURTLINES, INC.
8742 NORTH 78 TH AVENUE
PEORIA, ARIZONA 85345
PHONE (623) 939 - 8126
FAX (623) 939 - 2526
WWW.ARIZONACOURTLINES.COM

DRAWN BY: EDDIE CAFFERATA

CHECKED BY:

QUANTITY: _____