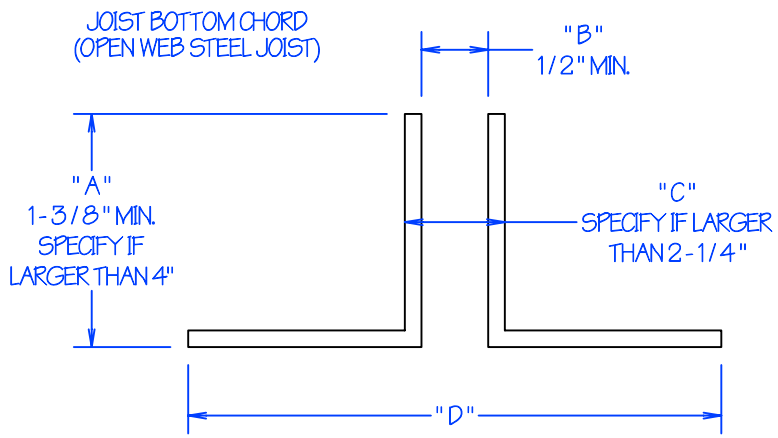

"A" = _____

"B" = _____

"C" = _____

"D" = _____

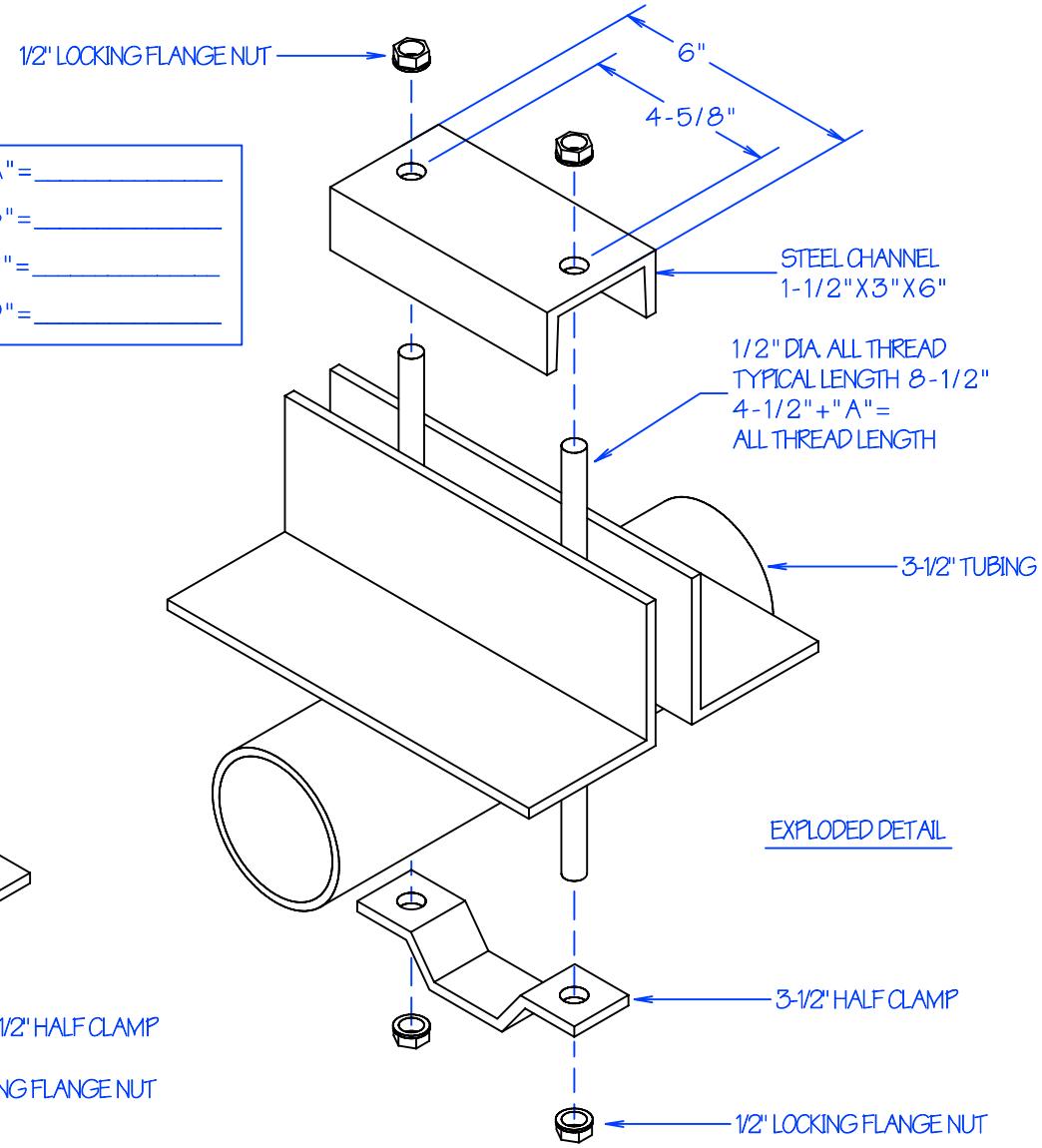

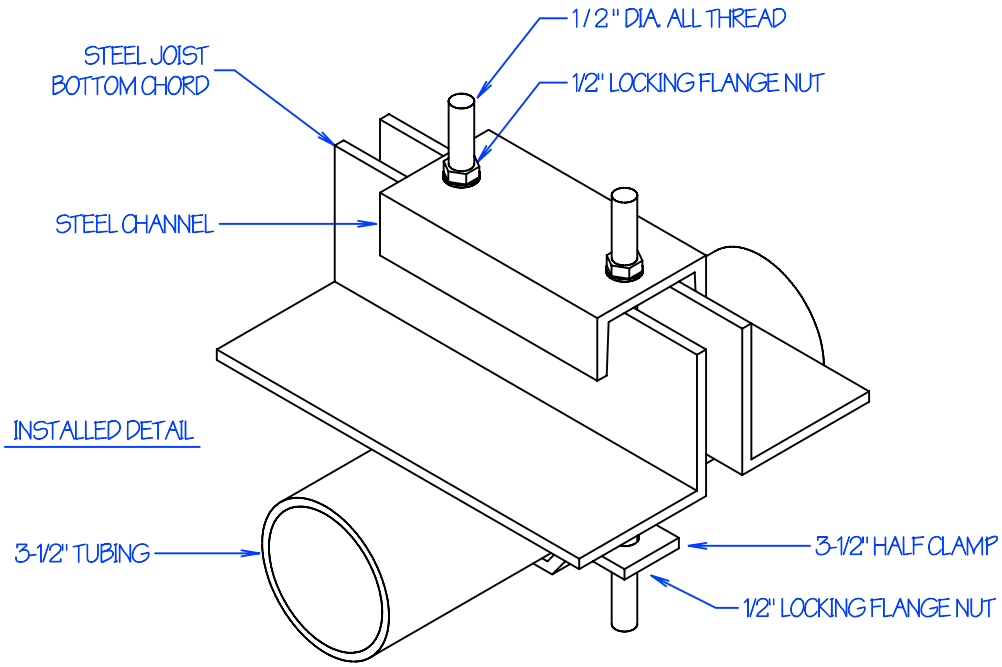

* PATENTED

REVISION / STAGE:	MONTH / DAY / YEAR	RELATED DRAWINGS / INFORMATION:
D - 1		THIS DRAWING IS PROPERTY OF ARIZONA COURTLINES, INC. AND MAY NOT BE REPRODUCED WITHOUT WRITTEN PERMISSION

D - 1

JOIST / TRUSS CLAMP
(3-1/2" TUBING TO OPEN WEB STEEL JOIST)

ARIZONA COURTLINES, INC.
8742 NORTH 78 TH AVENUE
PEORIA, ARIZONA 85345
PHONE (623) 939 - 8126
FAX (623) 939 - 2526
WWW.ARIZONACOURTLINES.COM

DRAWN BY: EDDIE CAFFERATA

CHECKED BY:

QUANTITY: _____