IMPORTANT NOTE:

CABLE SUPPLIED SHALL BE 1/4" Ø GALVANIZED AIRCRAFT CABLE WITH A MINIMUM BREAKING STRENGTH OF 7,000 LBS.

ALL ANCHORS SUPPLIED BY INSTALLER (MIN. 2)

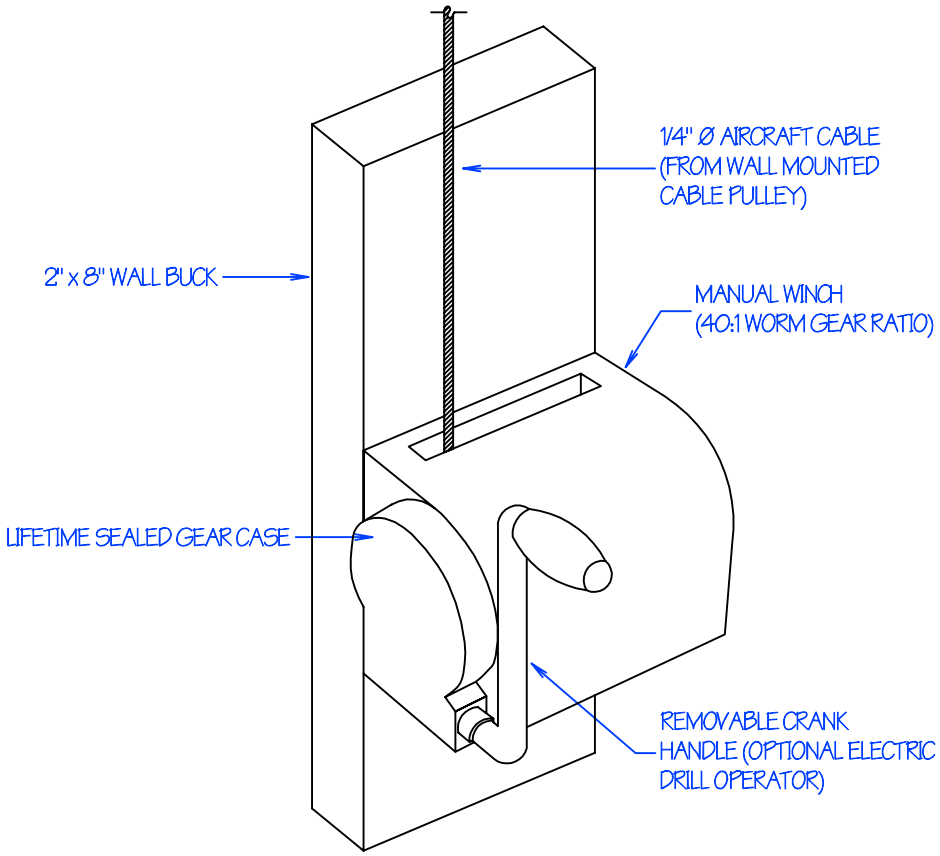

FLAT SURFACE MOUNT

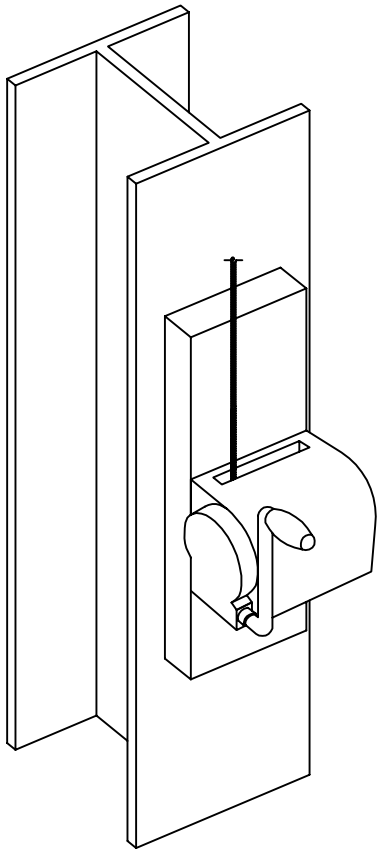

I-BEAM MOUNT

REVISION / STAGE:	MONTH / DAY / YEAR	RELATED DRAWINGS / INFORMATION:	MW-1000 (ACI MODEL #)	ARIZONA COURTLINES, INC.	DRAWN BY: EDDIE CAFFERATA
					CHECKED BY:
			MANUAL WINCH 1,000 LB. CAPACITY	8742 NORTH 78 TH AVENUE PEORIA, ARIZONA 85345 PHONE (623) 939 - 8126 FAX (623) 939 - 2526 WWW.ARIZONACOURTLINES.COM	QUANTITY:
MW-1000		THIS DRAWING IS PROPERTY OF ARIZONA COURTLINES, INC. AND MAY NOT BE REPRODUCED WITHOUT WRITTEN PERMISSION			