ALSO SEE DRAWING " E L C P - W 1 "

NOTE: ALL WIRES TO DISPLAY SCREEN AND ALL WIRES TO MOTORS MUST BE HOOKED UP BEFORE HOOKING UP TERMINALS "A" & "B". FAILURE TO FOLLOW THESE DIRECTIONS MAY RESULT IN DAMAGE TO COMPONENT(S) AND VOID WARRANTY.
ALL WIRES FROM CONTROL PANEL TO DISPLAY SCREEN MUST BE SHIELDED.

THIS PRODUCT HAS BEEN FULLY TESTED AT THE FACTORY BEFORE BEING RELEASED TO CUSTOMER OR CONTRACTOR.

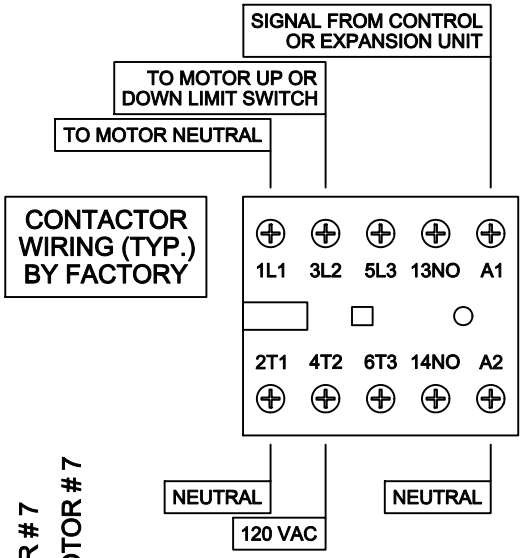

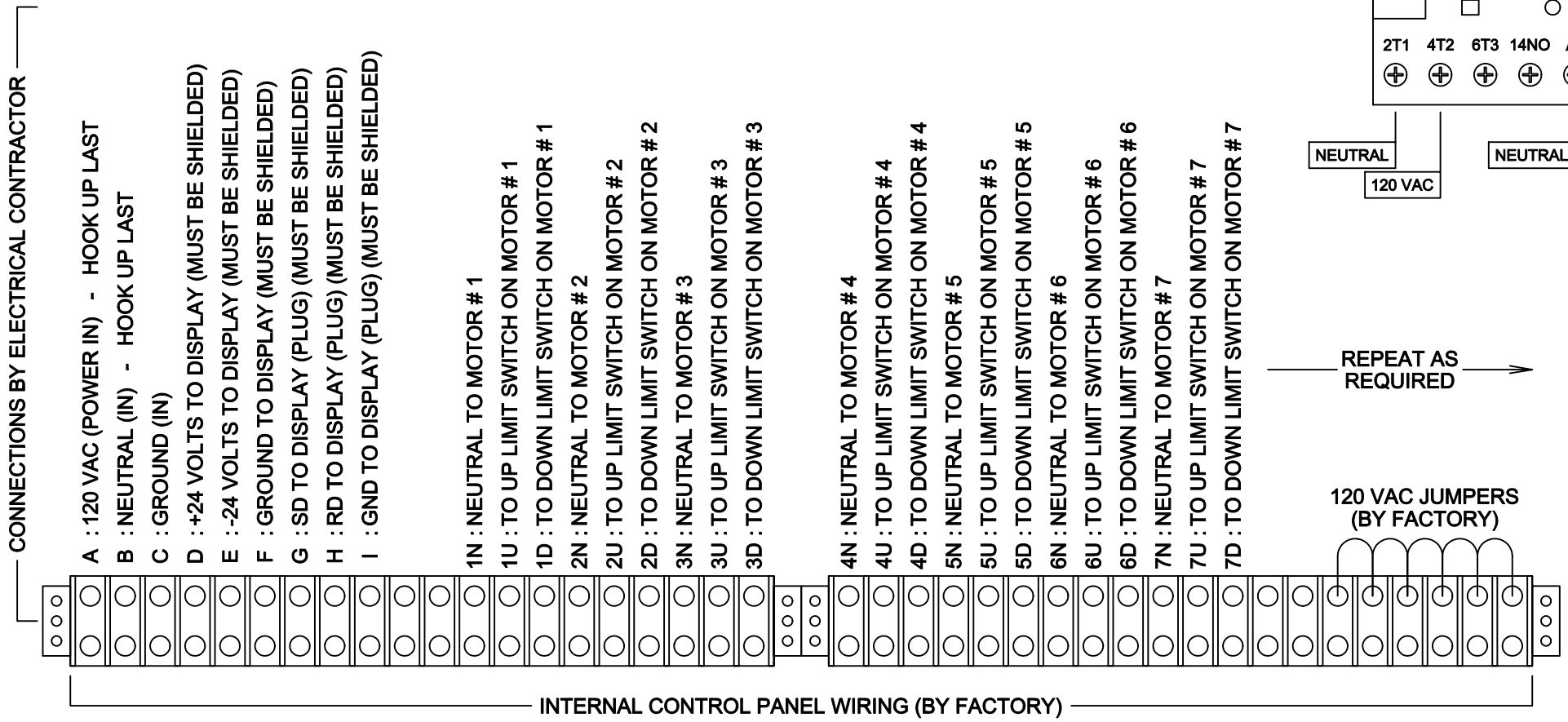

REVISION / STAGE:	MONTH / DAY / YEAR	RELATED DRAWINGS / INFORMATION:			
			ELCP	ARIZONA COURTLINES, INC.	DRAWN BY: EDDIE CAFFERATA
					CHECKED BY:
			WIRING DIAGRAM	8742 NORTH 78 TH AVENUE PEORIA, ARIZONA 85345 PHONE (623) 939 - 8126 FAX (623) 939 - 2526 WWW.ARIZONACOURTLINES.COM	QUANTITY:
ELCP-W2		THIS DRAWING IS PROPERTY OF ARIZONA COURTLINES, INC. AND MAY NOT BE REPRODUCED WITHOUT WRITTEN PERMISSION			