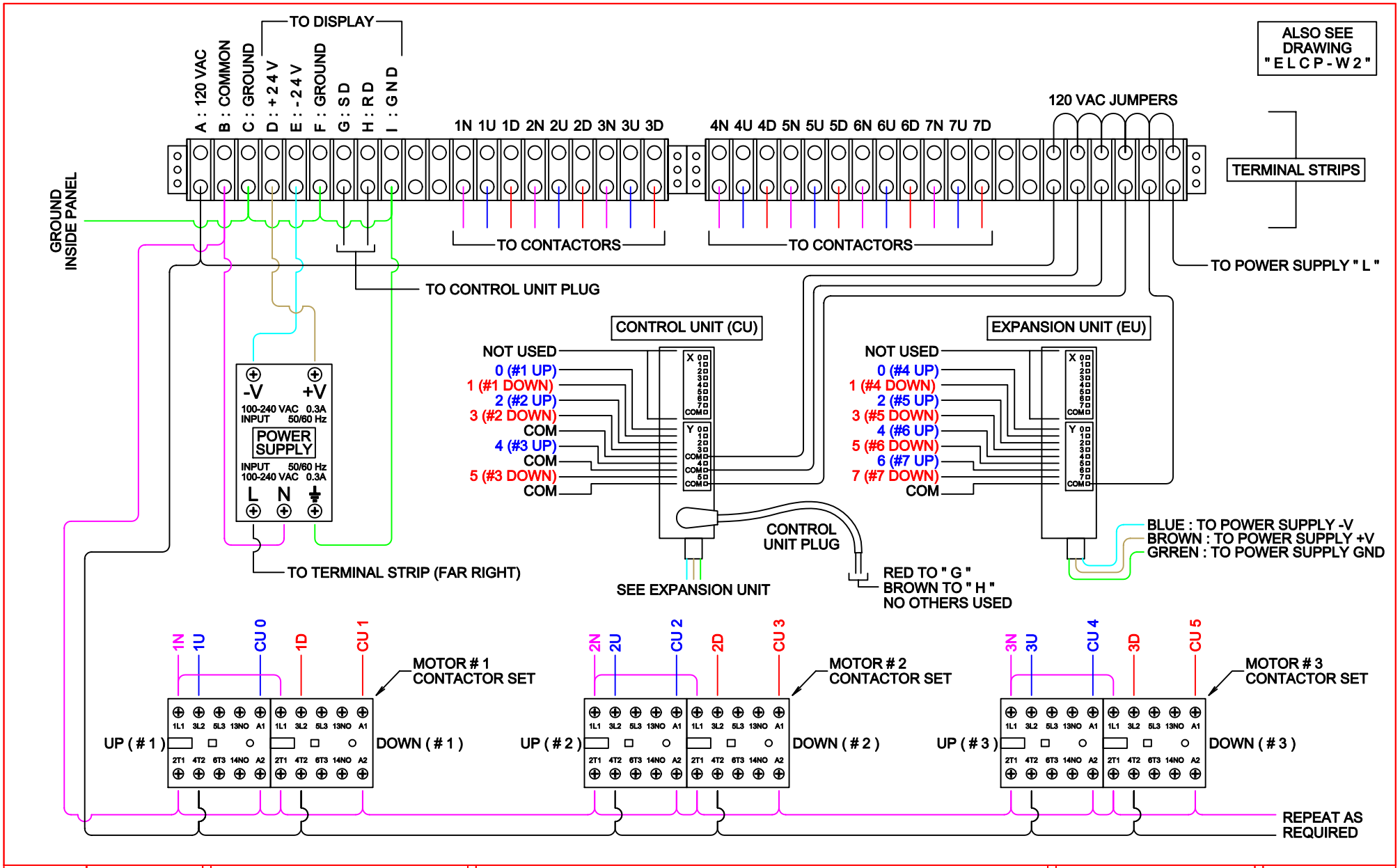

REVISION / STAGE:	MONTH / DAY / YEAR	RELATED DRAWINGS / INFORMATION:	ELCP	ARIZONA COURTLINES, INC.	DRAWN BY: EDDIE CAFFERATA
					CHECKED BY:
			WIRING DIAGRAM	8742 NORTH 78 TH AVENUE PEORIA, ARIZONA 85345 PHONE (623) 939 - 8126 FAX (623) 939 - 2526 WWW.ARIZONACOURTLINES.COM	QUANTITY:
ELCP-W1		THIS DRAWING IS PROPERTY OF ARIZONA COURTLINES, INC. AND MAY NOT BE REPRODUCED WITHOUT WRITTEN PERMISSION			