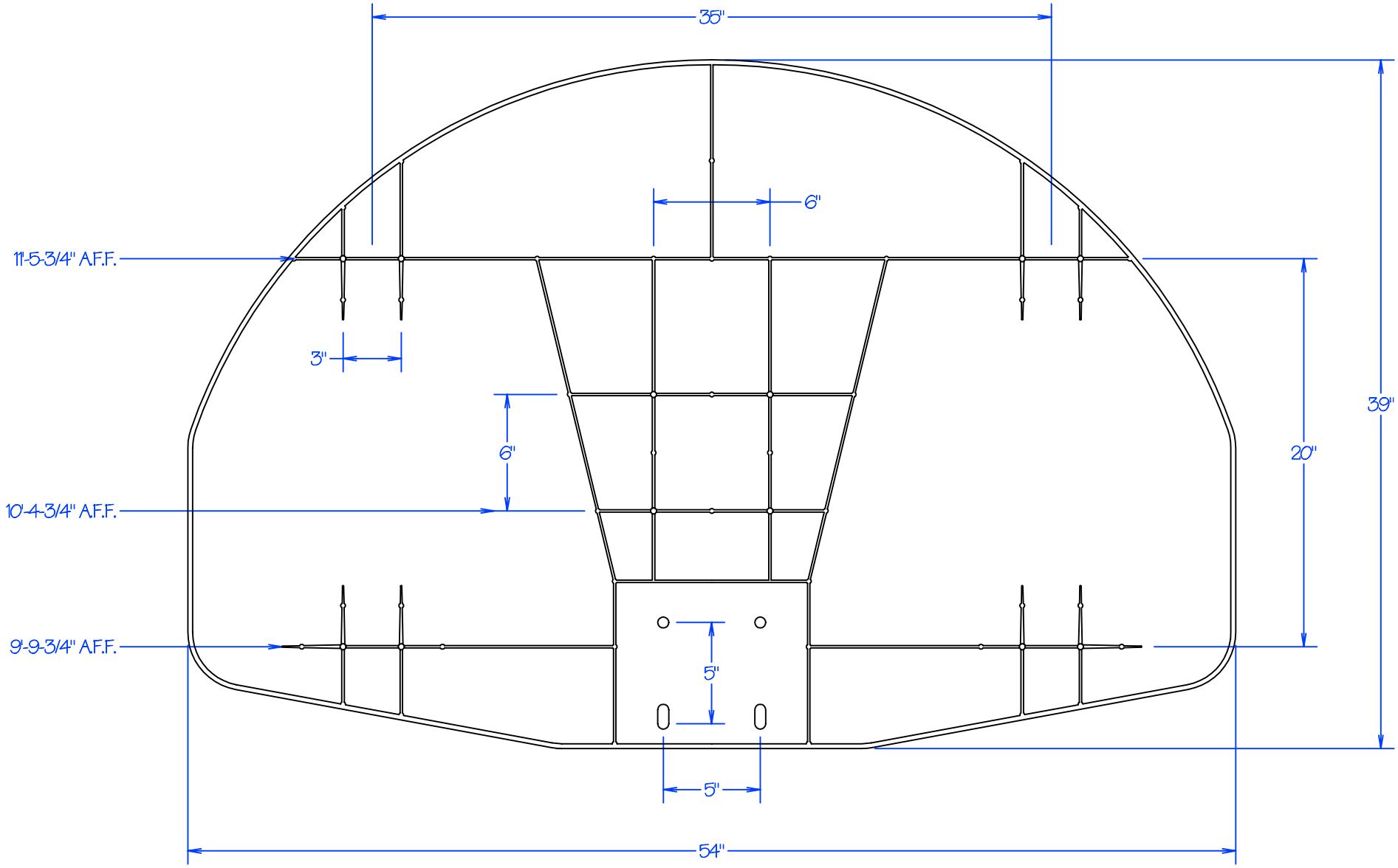

REVISION / STAGE:	MONTH / DAY / YEAR
FBB-AL	

RELATED DRAWINGS / INFORMATION:

THIS DRAWING IS PROPERTY OF ARIZONA COURTLINES, INC. AND MAY NOT BE REPRODUCED WITHOUT WRITTEN PERMISSION

FBB-AL
(ACI MODEL #)

FAN BACKBOARD ALUMINUM
54" (WIDTH) x 39" (HEIGHT)

ARIZONA COURTLINES, INC.
8742 NORTH 78 TH AVENUE
PEORIA, ARIZONA 85345
PHONE (623) 939 - 8126
FAX (623) 939 - 2526
WWW.ARIZONACOURTLINES.COM

DRAWN BY: EDDIE CAFFERATA

CHECKED BY:

QUANTITY: _____