BBP-B1 (BOLT-ON) BACKABORD PADDING
IS FOR USE WITH 72" WIDE BACKBOARDS

RECOMMENDED FOR USE WITH ACI MODEL #
BBG42 / BBFG42 / BBG42-C / BBG42-PS /
BBG48 / BBFG48 / BBG48-C / BBG48-PS

BBP-B2 (BOLT-ON) OUTDOOR BACKABORD PADDING
IS AVAILABLE FOR 48", 54", 60", & 72" WIDE BACKBOARDS

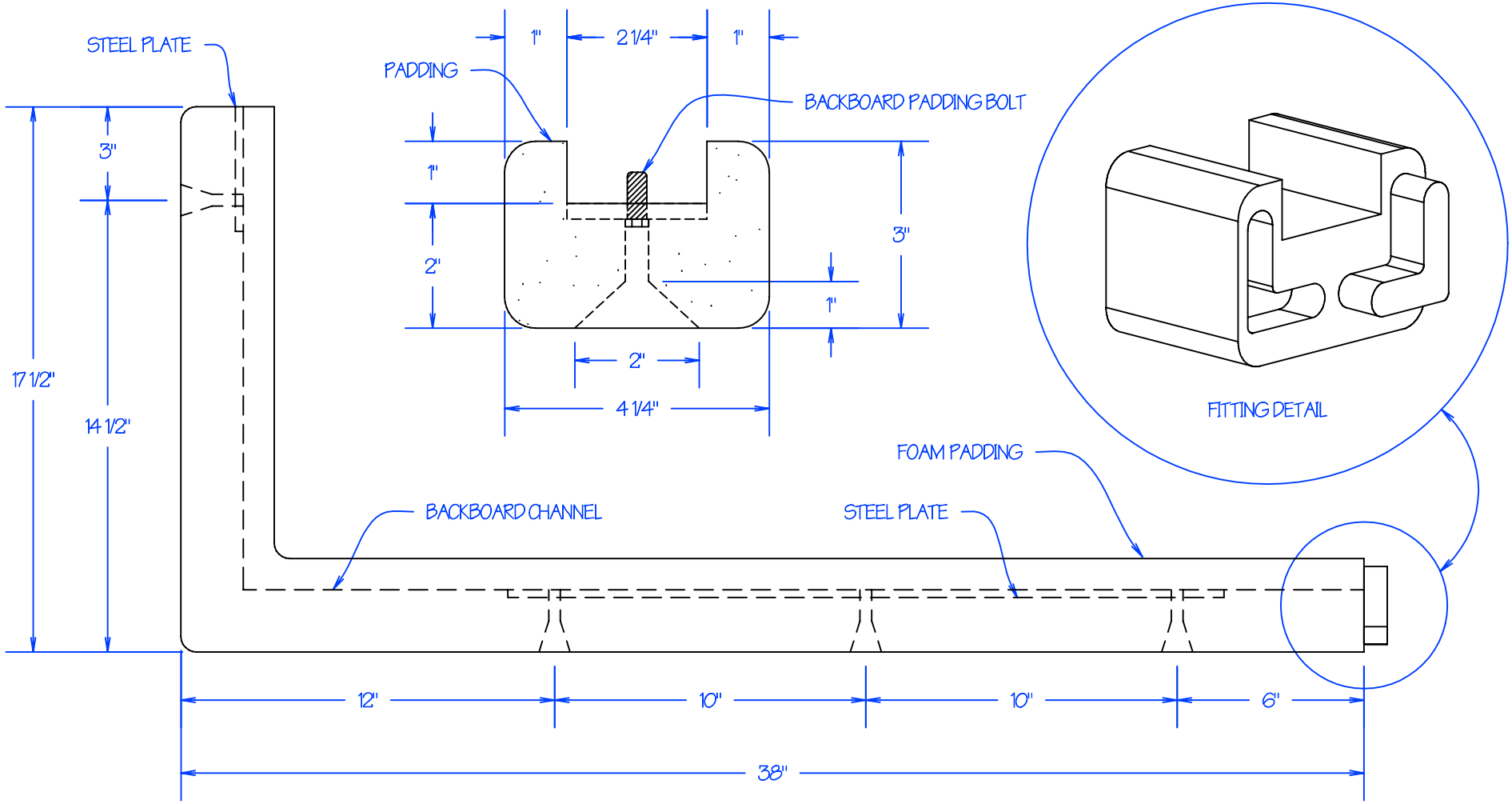

REVISION / STAGE:	MONTH / DAY / YEAR	RELATED DRAWINGS / INFORMATION:
BBP-B1 / BBP-B2		THIS DRAWING IS PROPERTY OF ARIZONA COURTLINES, INC. AND MAY NOT BE REPRODUCED WITHOUT WRITTEN PERMISSION

BBP-B1 & BBP-B2

BACKBOARD PADDING (BOLT-ON)
(INDOOR 72" WIDE - OUTDOOR 48", 54", 60", & 72" WIDE)

ARIZONA COURTLINES, INC.

8742 NORTH 78 TH AVENUE
PEORIA, ARIZONA 85345
PHONE (623) 939 - 8126
FAX (623) 939 - 2526
WWW.ARIZONACOURTLINES.COM

DRAWN BY:
EDDIE CAFFERATA

CHECKED BY:

QUANTITY: