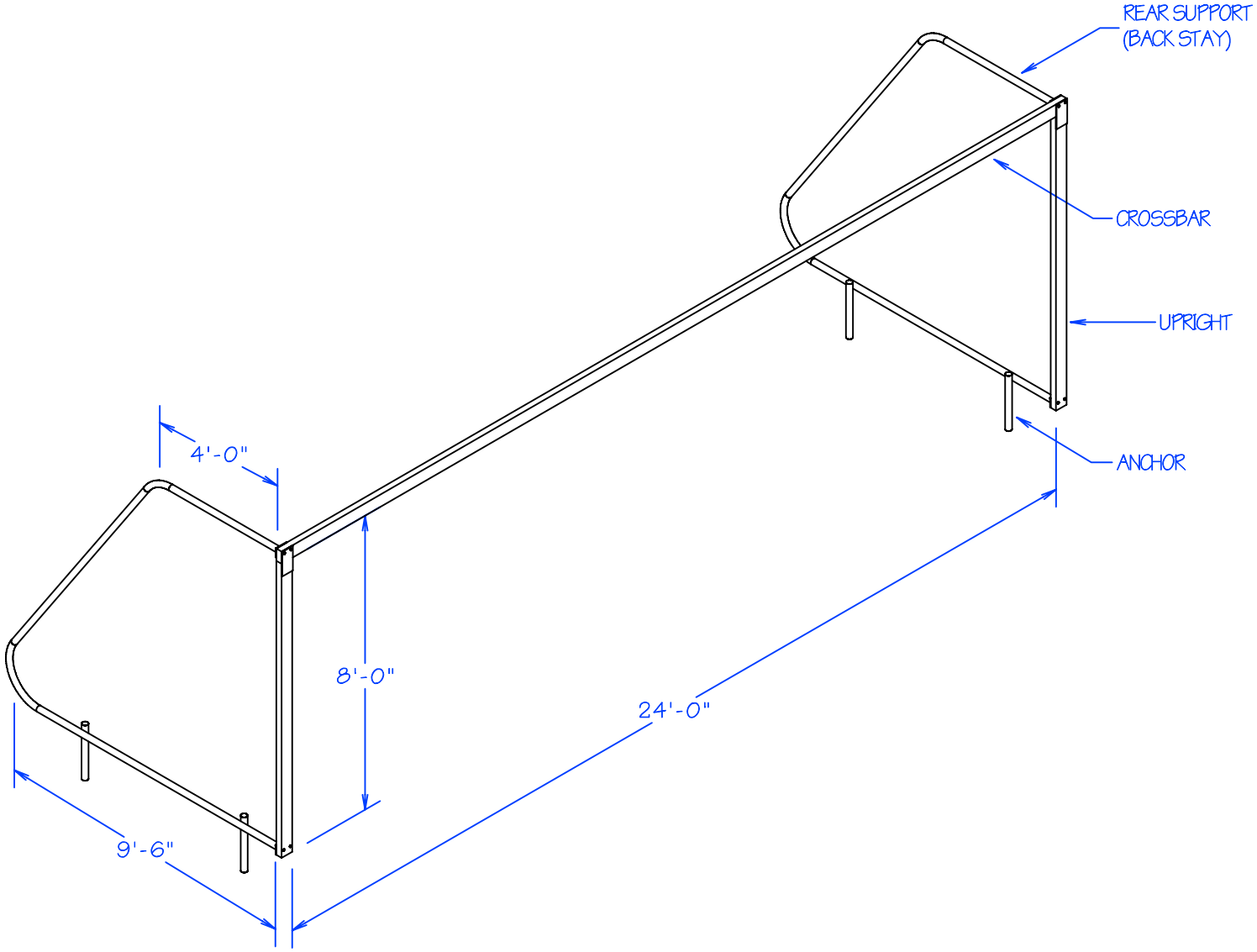

REVISION / STAGE:	MONTH / DAY / YEAR	RELATED DRAWINGS / INFORMATION:
SCG-24S		THIS DRAWING IS PROPERTY OF ARIZONA COURTLINES, INC. AND MAY NOT BE REPRODUCED WITHOUT WRITTEN PERMISSION

SCG-24S

SOCCER GOAL
OFFICIAL SIZE, PORTABLE, STEEL CONSTRUCTION

ARIZONA COURTLINES, INC.
8742 NORTH 78 TH AVENUE
PEORIA, ARIZONA 85345
PHONE (623) 939 - 8126
FAX (623) 939 - 2526
WWW.ARIZONACOURTLINES.COM

DRAWN BY: EDDIE CAFFERATA

CHECKED BY:

QUANTITY: