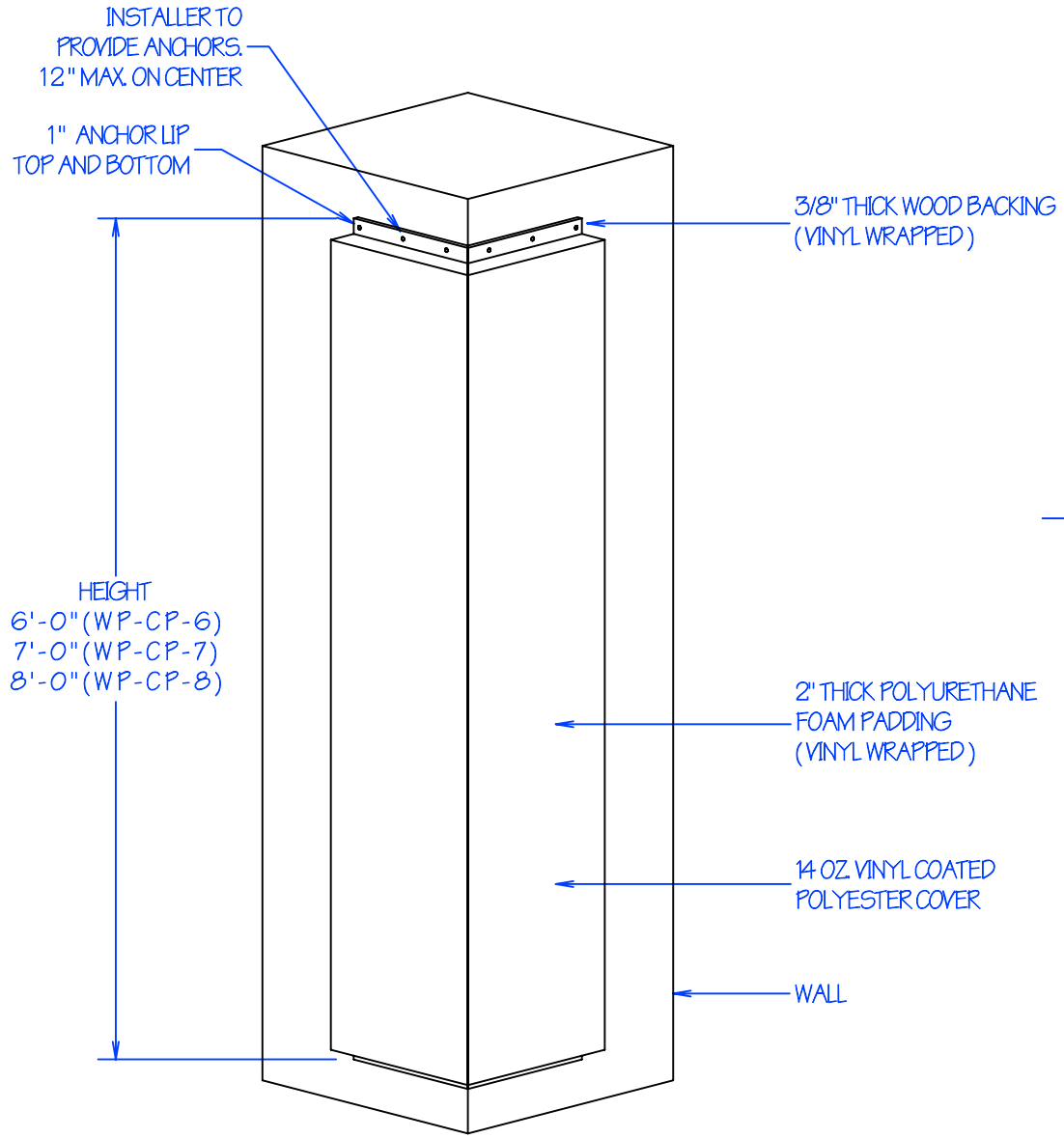


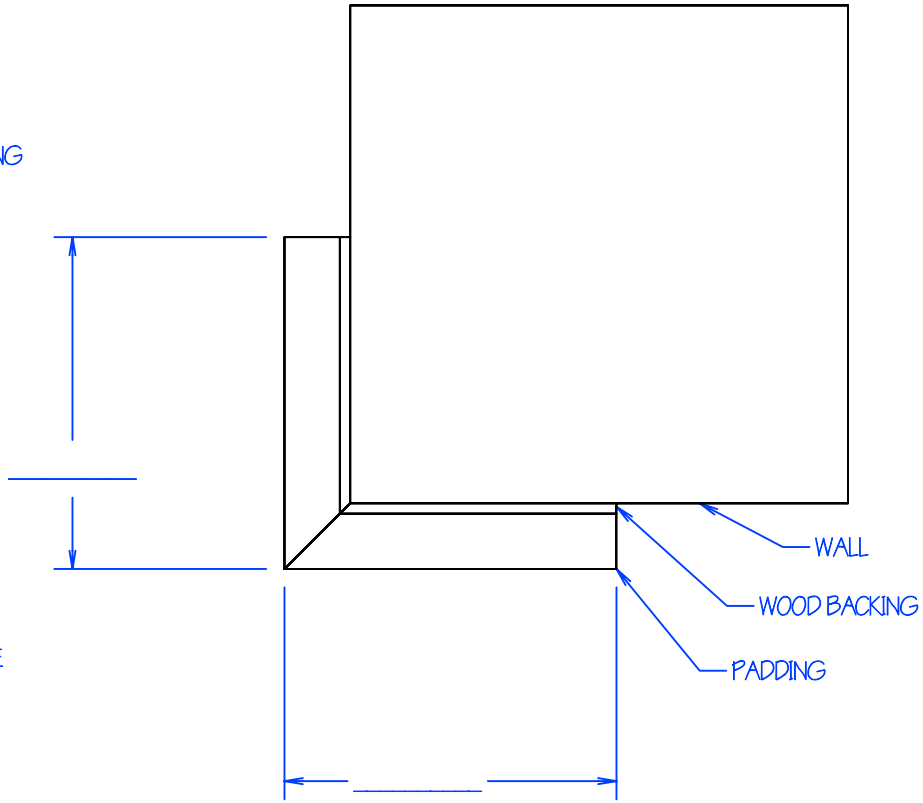


QTY = _____

☐ WP-CP-6 ☐ WP-CP-7 ☐ WP-CP-8

| REVISION / STAGE: | MONTH / DAY / YEAR | RELATED DRAWINGS / INFORMATION: | WP-CP-6 , WP-CP-7 , WP-CP-8 | ARIZONA COURTLINES, INC. | DRAWN BY: EDDIE CAFFERATA |
|---|---|---|---|---|---|
| | | | | | CHECKED BY: |
| | | | WALL PADDING, CORNER PADDING<br>HEIGHT: 6'-0" , 7'-0" , 8'-0" | 8742 NORTH 78 TH AVENUE<br>PEORIA, ARIZONA 85345<br>PHONE (623) 939 - 8126<br>FAX (623) 939 - 2526<br>WWW.ARIZONACOURTLINES.COM | QUANTITY: _____ |
| WP-CP-____ | | THIS DRAWING IS PROPERTY OF ARIZONA COURTLINES, INC. AND MAY NOT BE REPRODUCED WITHOUT WRITTEN PERMISSION | | | |