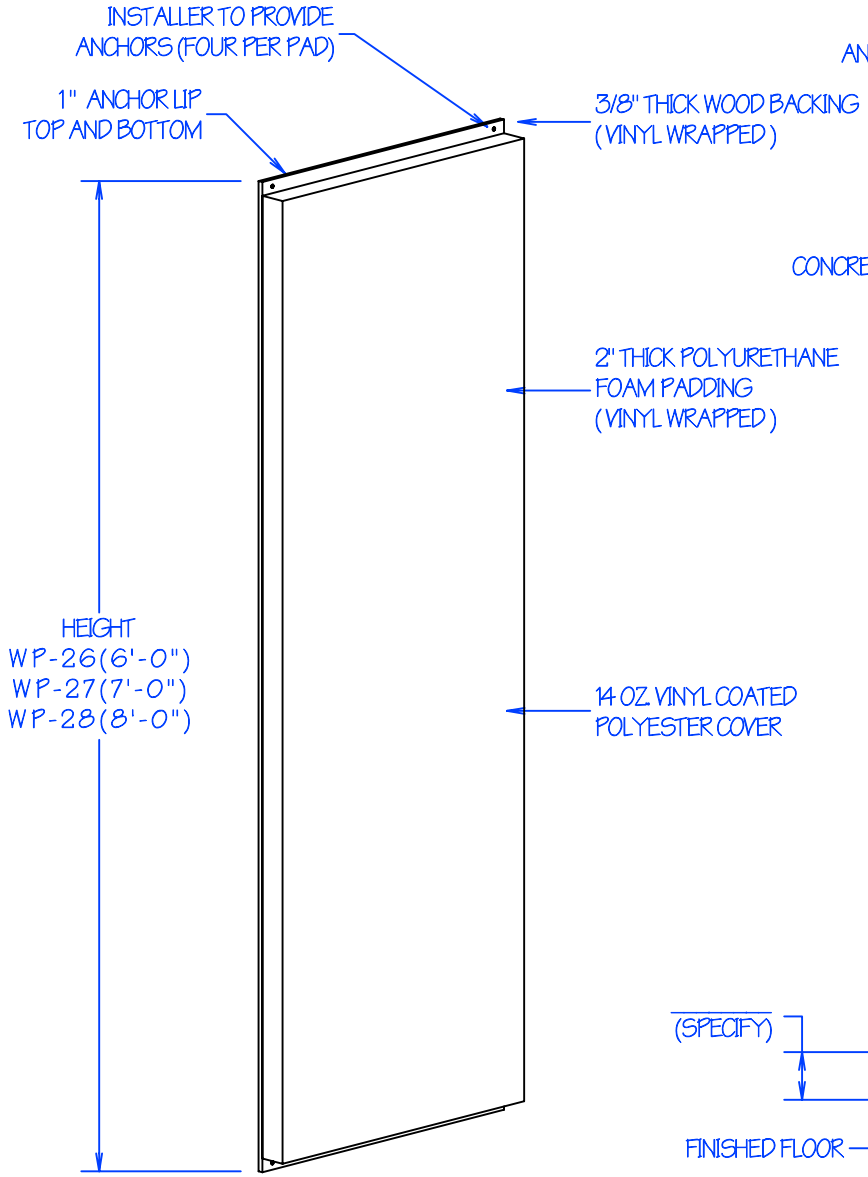

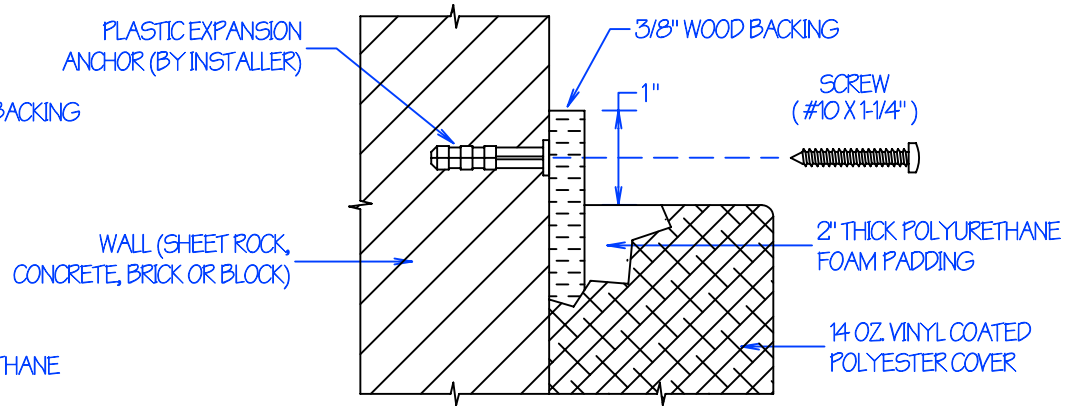

STANDARD PADDING LAYOUT FOR BEHIND BASKETBALL UNITS
(NUMBER OF PADS VARY PER PROJECT)

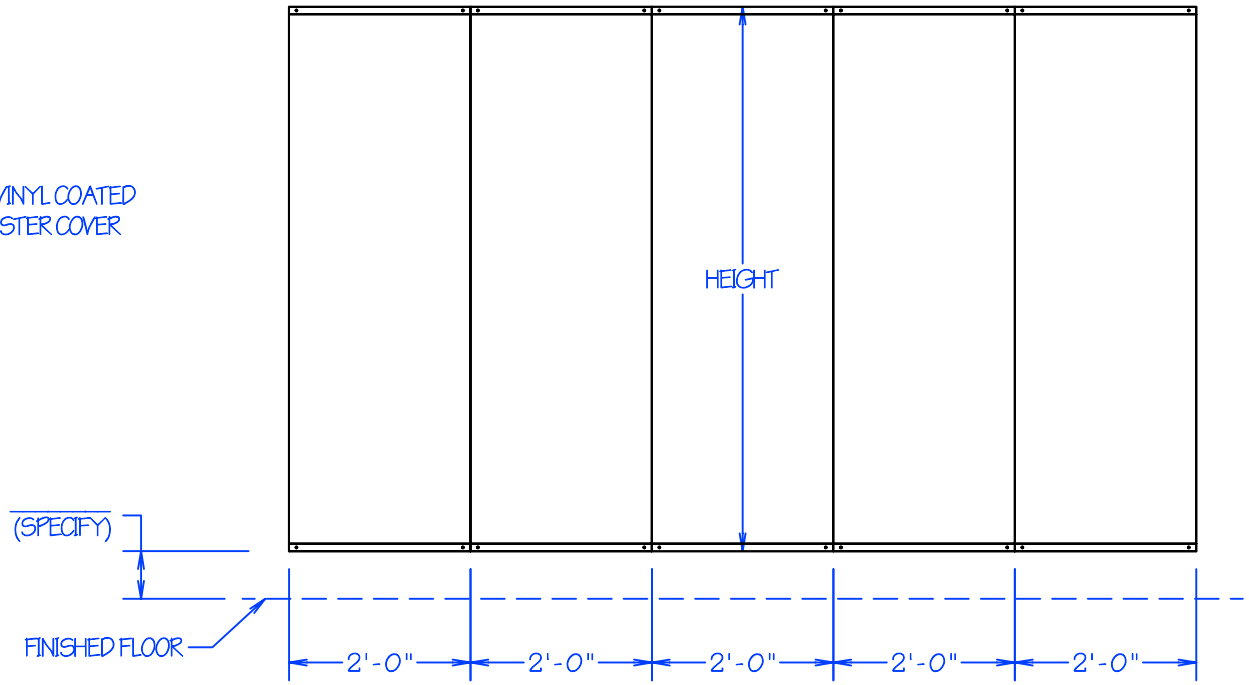

REVISION / STAGE:	MONTH / DAY / YEAR	RELATED DRAWINGS / INFORMATION:
WP-2_		THIS DRAWING IS PROPERTY OF ARIZONA COURTLINES, INC. AND MAY NOT BE REPRODUCED WITHOUT WRITTEN PERMISSION

WALL PADDING

- ☐ WP-26 - 2'-0" WIDTH X 6'-0" HEIGHT
- ☐ WP-27 - 2'-0" WIDTH X 7'-0" HEIGHT
- ☐ WP-28 - 2'-0" WIDTH X 8'-0" HEIGHT

ARIZONA COURTLINES, INC.
8742 NORTH 78 TH AVENUE
PEORIA, ARIZONA 85345
PHONE (623) 939 - 8126
FAX (623) 939 - 2526
WWW.ARIZONACOURTLINES.COM

DRAWN BY: EDDIE CAFFERATA

CHECKED BY:

QUANTITY: _____