FOR WALL BUCK & ANCHOR DETAILS
SEE DRAWINGS "WM-1.2" & "WM-1.3"
PROPER ANCHORS TO BE SUPPLIED BY INSTALLER.

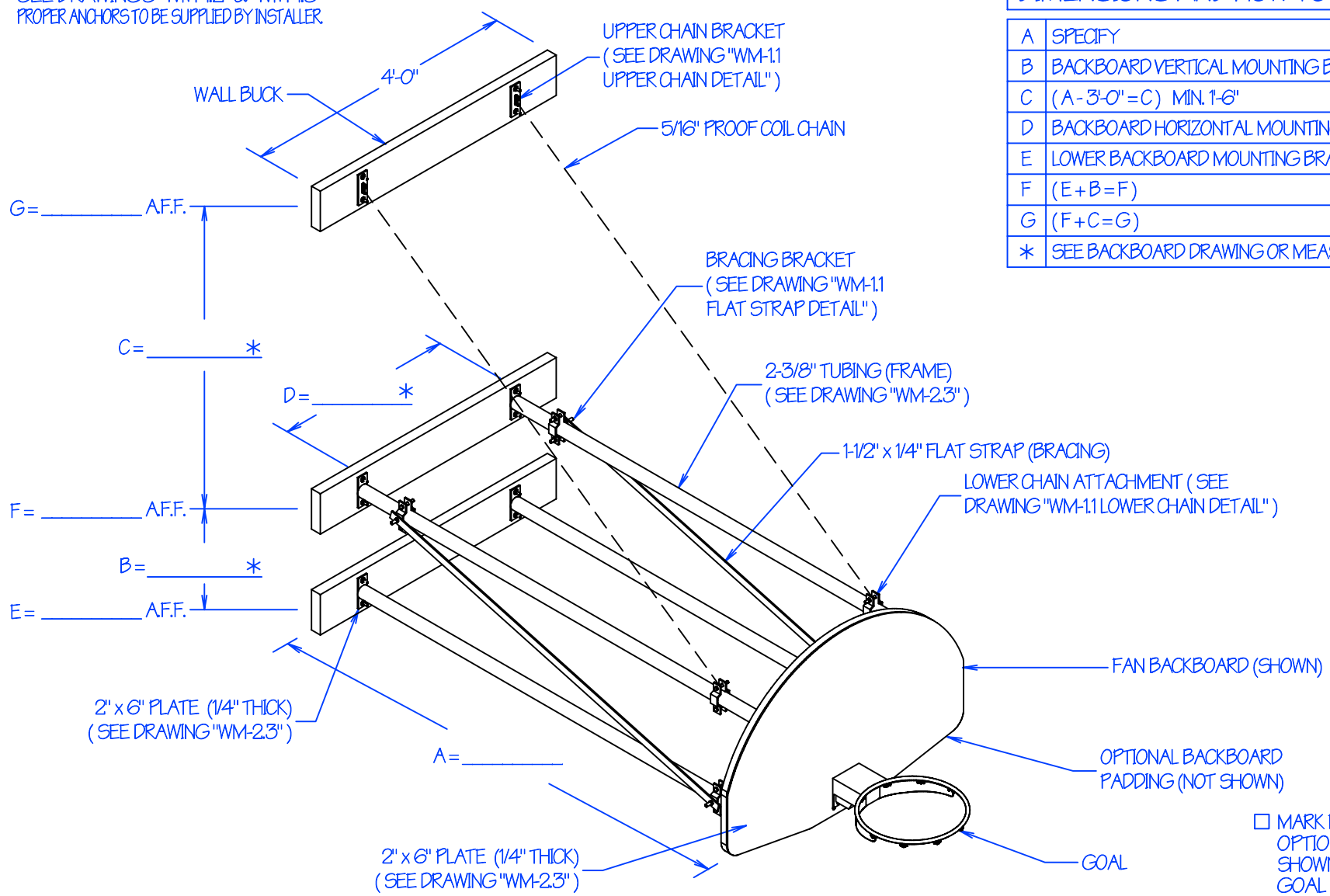

DIMENSIONS AND HOW TO CALCULATE THEM	
A	SPECIFY
B	BACKBOARD VERTICAL MOUNTING BRACKET SPACING O/C
C	(A - 3'-0" = C) MIN. 1'-6"
D	BACKBOARD HORIZONTAL MOUNTING BRACKET SPACING O/C
E	LOWER BACKBOARD MOUNTING BRACKET A.F.F.
F	(E + B = F)
G	(F + C = G)
*	SEE BACKBOARD DRAWING OR MEASURE CURRENT BACKBOARD

☐ MARK FOR HEIGHT ADJUSTER.
OPTIONAL HEIGHT ADJUSTER NOT SHOWN. HEIGHT ADJUSTER ALLOWS GOAL HEIGHT TO ADJUSTER FROM 8'-0" TO 10'-0" ABOVE FINISHED FLOOR.

REVISION / STAGE:	MONTH / DAY / YEAR	RELATED DRAWINGS / INFORMATION:
WMST		THIS DRAWING IS PROPERTY OF ARIZONA COURTLINES, INC. AND MAY NOT BE REPRODUCED WITHOUT WRITTEN PERMISSION

WMST

WALL MOUNTED
STATIONARY

ARIZONA COURTLINES, INC.

8742 NORTH 78 TH AVENUE
PEORIA, ARIZONA 85345
PHONE (623) 939 - 8126
FAX (623) 939 - 2526
WWW.ARIZONACOURTLINES.COM

DRAWN BY:
EDDIE CAFFERATA

CHECKED BY:

QUANTITY:
_____