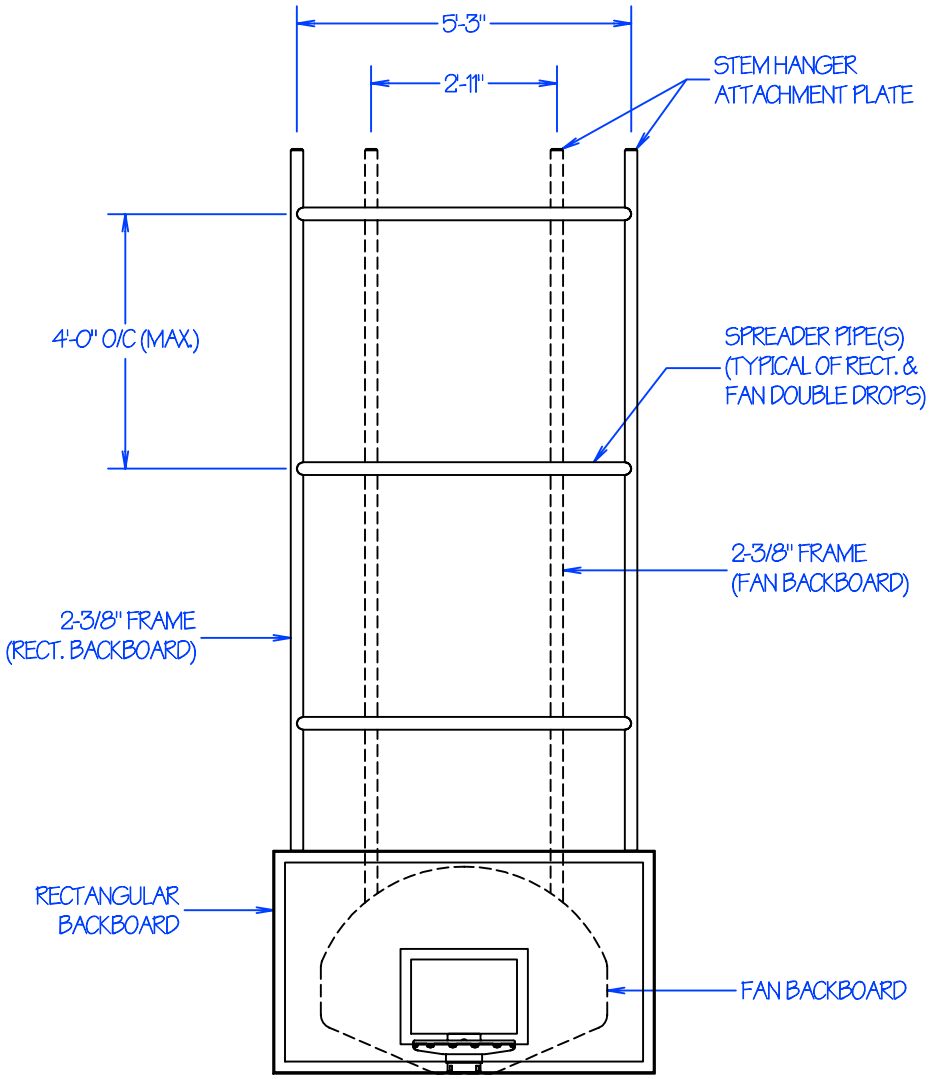

DOUBLE DROP FRAME (MAIN MAST) - FOR RECTANGULAR & FAN SHAPED BACKBOARDS

FACE OF BACKBOARD TO PIVOT POINT

BACKBOARD	F F	B F	F F (HGT ADJ)	BF (HGT ADJ)
RECT. GLASS	9-15/16"	5-7/16"	12-3/16"	7-11/16"
FBB-ALUM	9-3/16"	4-11/16"	11-7/16"	6-15/16"
FBB-FG	9-1/4"	4-3/4"	11-1/2"	7"
FBB-GLASS	9-15/16"	5-7/16"	12-3/16"	7-11/16"
FBB-ST	9-3/16"	4-11/16"	11-7/16"	6-15/16"

F F = FORWARD FOLD / B F = BACKWARD FOLD / HGT ADJ = HEIGHT ADJUSTER

IF THE BACKBOARD YOU ARE INSTALLING IS NOT SHOWN ABOVE OR HAS NOT BEEN PROVIDED BY ACI. USE THE FOLLOWING FORMULAS:

FORWARD FOLD (7-11/16" + BACKBOARD THICKNESS = ?)
BACKWARD FOLD (3-3/16" + BACKBOARD THICKNESS = ?)
FORWARD FOLD W/ HGT ADJ (9-15/16" + BACKBOARD THICKNESS = ?)
BACKWARD FOLD W/ HGT ADJ (5-7/16" + BACKBOARD THICKNESS = ?)

STEM HANGER OFFSET:
STEM HANGER IS ALWAYS ON OPPOSITE SIDE OF STEM AS THE DIRECTION OF FOLD.

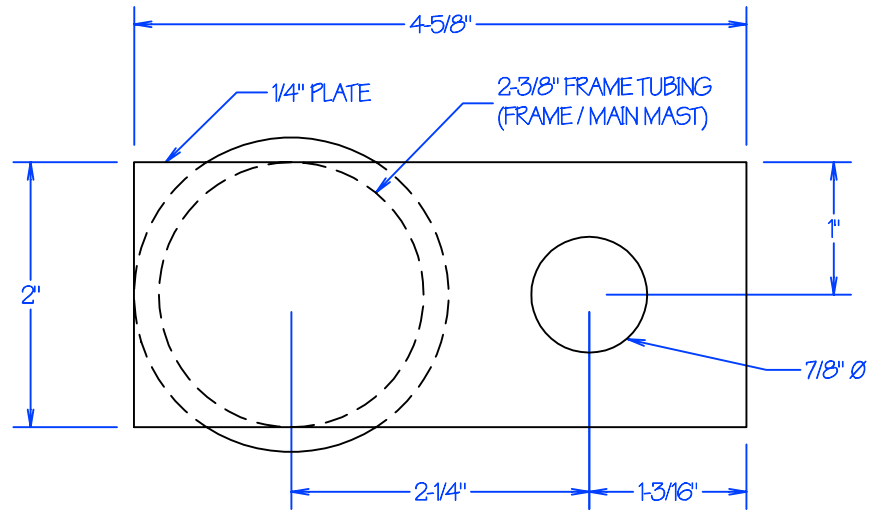

STEM HANGER ATTACHMENT PLATE

REVISION / STAGE:	MONTH / DAY / YEAR	RELATED DRAWINGS / INFORMATION:
2D - STANDARD		THIS DRAWING IS PROPERTY OF ARIZONA COURTLINES, INC. AND MAY NOT BE REPRODUCED WITHOUT WRITTEN PERMISSION

STANDARD DIMENSIONS FOR
DOUBLE DROP CEILING SUSPENDED BASKETBALL UNITS

STEM HANGER SPACING / FRAME SPACING
FACE OF BACKBOARD TO PIVOT POINT

ARIZONA COURTLINES, INC.
8742 NORTH 78 TH AVENUE
PEORIA, ARIZONA 85345
PHONE (623) 939 - 8126
FAX (623) 939 - 2526
WWW.ARIZONACOURTLINES.COM

DRAWN BY: EDDIE CAFFERATA

CHECKED BY:

QUANTITY: