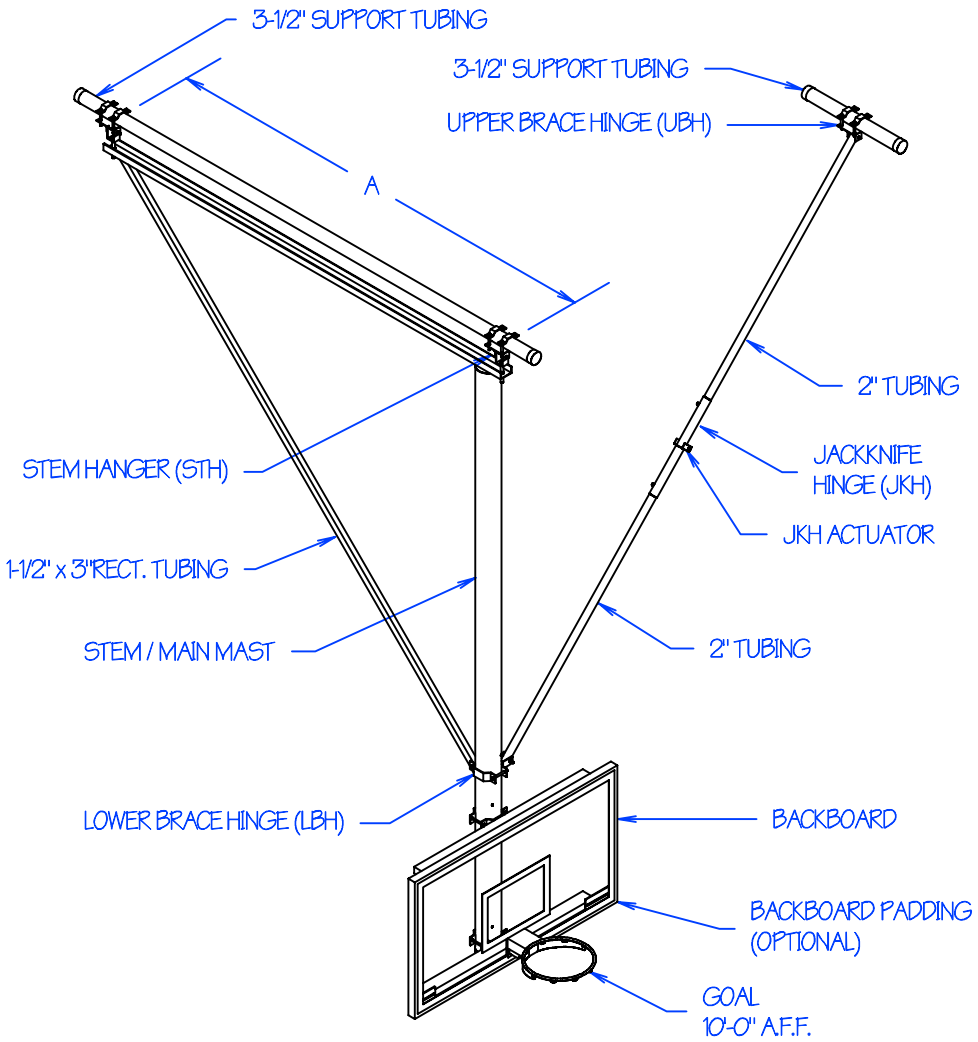

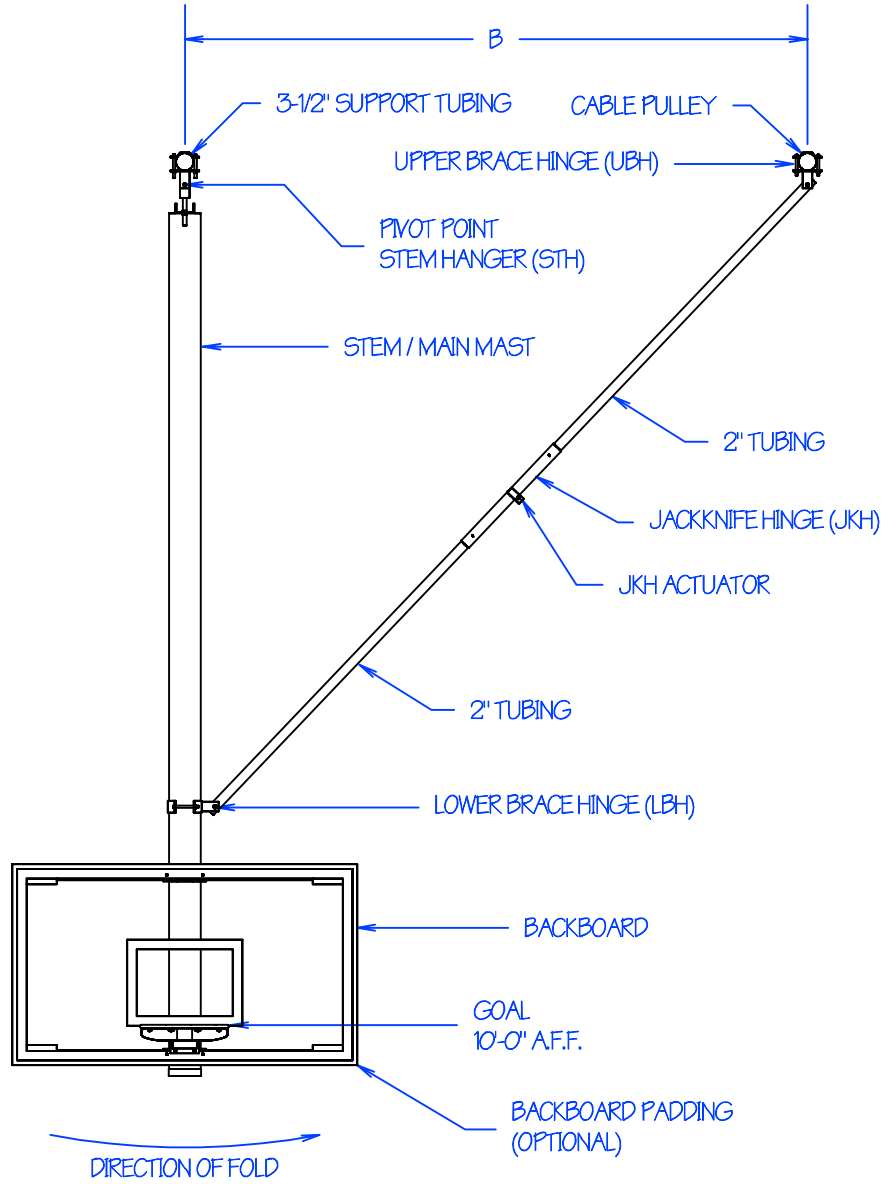

TO REQUEST ADDITIONAL INFORMATION (DIMENSIONS, WEIGHT LOADS, ETC.) PLEASE CONTACT ARIZONA COURTLINES, INC. IF SUPPORTS ARE TO BE SUPPLIED BY OTHERS (G.C., CUSTOMER, ETC.) PLEASE CONTACT ACI, SO THAT THE PROPER SUPPORTS CAN BE PROVIDED IN THE PROPER LOCATIONS.

REVISION / STAGE:	MONTH / DAY / YEAR	RELATED DRAWINGS / INFORMATION:
1D-SFRB		THIS DRAWING IS PROPERTY OF ARIZONA COURTLINES, INC. AND MAY NOT BE REPRODUCED WITHOUT WRITTEN PERMISSION

1D-SFRB

SINGLE DROP (GRAND CANYON SERIES)
SIDE FOLD - REAR BRACED

ARIZONA COURTLINES, INC.
8742 NORTH 78 TH AVENUE
PEORIA, ARIZONA 85345
PHONE (623) 939 - 8126
FAX (623) 939 - 2526
WWW.ARIZONACOURTLINES.COM

DRAWN BY: EDDIE CAFFERATA

CHECKED BY:

QUANTITY: