☐ TYPE #1

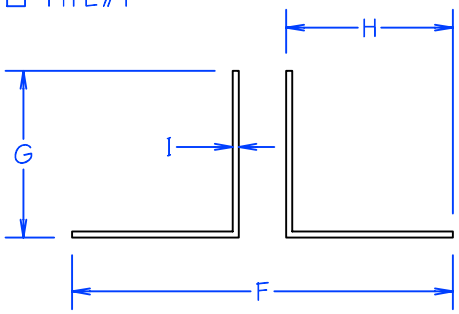

☐ TYPE #2

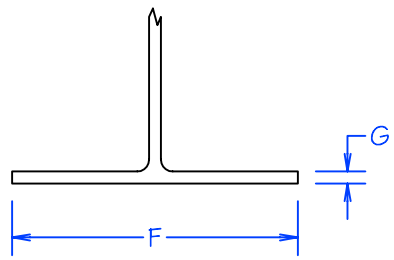

☐ TYPE #3

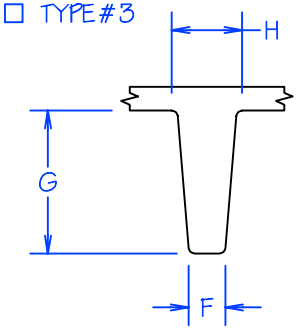

SPECIFY

- ☐ TAKE OFF FROM PLANS
- ☐ FIELD CHECK (BUILDING)

PROVIDE

A = _____

B = _____

C = _____

D = _____

E = _____

F = _____

G = _____

H = _____

I = _____

LOCATE AND PROVIDE DIMENSIONS FOR ANY OBJECTS (CEILING, LIGHTS, DUCT WORK, BLEACHERS, ETC.) WHICH MAY INTERFERE WITH BACKSTOP INSTALLATION OR OPERATION. IF NO NOTES ARE MADE ACI WILL ASSUME THAT THERE WILL BE NO OBJECTS WHICH INTERFERE WITH THE BASKETBALL BACKSTOP ASSEMBLY. IF A SPECIAL SUPPORT STRUCTURE IS TO BE PROVIDED FOR BACKSTOP. PROVIDE A DETAIL AND DIMENSIONS.

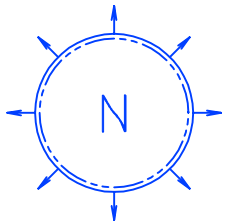

☐ TYPE #4

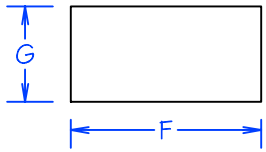

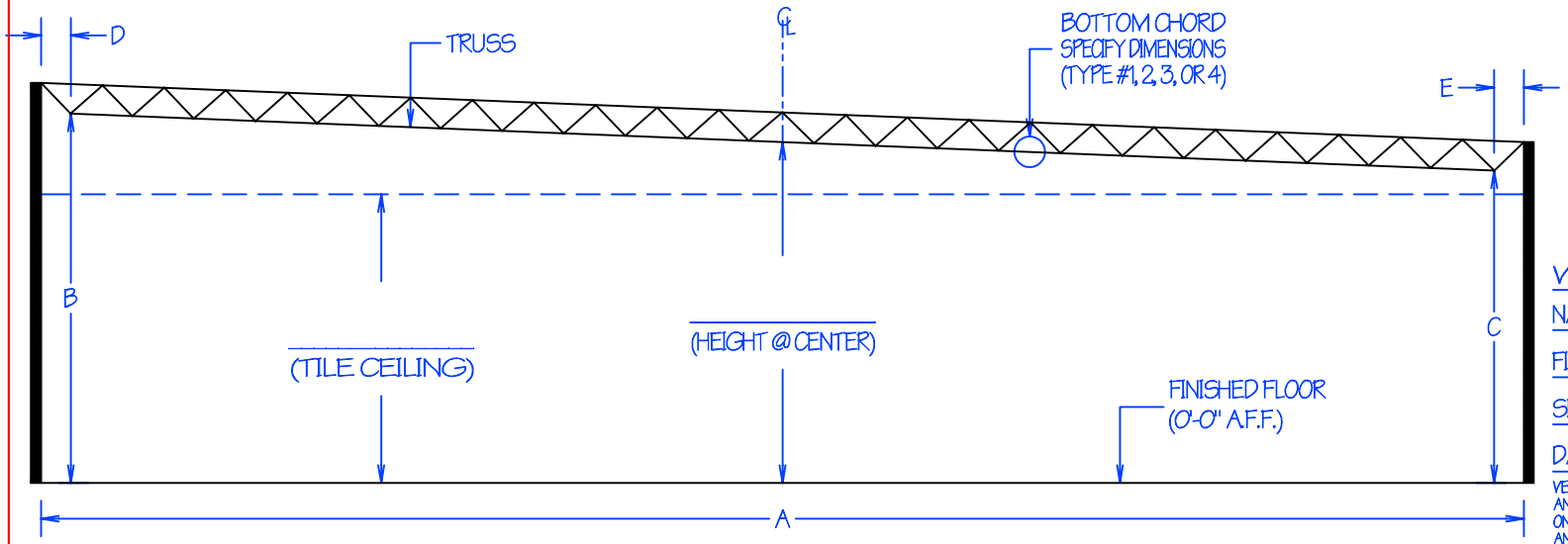

VERIFY OR SUPPLY DIMENSIONS

NAME: _____

FIRM: _____

SIGN: _____

DATE: _____

VERIFY OR SUPPLY DIMENSIONS. INFORMATION SHOULD BE VERIFIED AND OR SUPPLIED FROM MEASUREMENTS OF CONSTRUCTED BUILDING ONLY. BY SIGNING THIS YOU AGREE THAT ALL INFORMATION IS CORRECT AND ARIZONA COURTLINES, INC. IS TO PROCEED WITH MANUFACTURING.

REVISION / STAGE:	MONTH / DAY / YEAR	RELATED DRAWINGS / INFORMATION:
FC-1.4		THIS DRAWING IS PROPERTY OF ARIZONA COURTLINES, INC. AND MAY NOT BE REPRODUCED WITHOUT WRITTEN PERMISSION

PROJECT: _____

TRUSS HEIGHT & SLOPE

ARIZONA COURTLINES, INC.

8742 NORTH 78 TH AVENUE
PEORIA, ARIZONA 85345
PHONE (623) 939 - 8126
FAX (623) 939 - 2526
WWW.ARIZONACOURTLINES.COM

DRAWN BY: EDDIE CAFFERATA

CHECKED BY:

QUANTITY: _____